FORCE 10

STOVES

PROPANE AND NATURAL GAS MODELS

60100 60101, 60120 60121
60130 60131, 60140 60141
60150 60151

OWNER'S MANUAL AND WARRANTY

FORCE 10 MARINE COMPANY

23080 HAMILTON ROAD
RICHMOND, BC CANADA V6V 1C9
TEL: (604) 522-0233
FAX: (604) 522-9608

TABLE OF CONTENTS

PAGE

Introduction....1
Safety and Installation....2
Gas Pressures....2
Propane and Butane (LPG) Fuel Systems....3
LPG Installation....4
Natural Gas (CNG) Fuel System....5
CNG Installation....7
Fuel System Testing (LPG & CNG)....8
Stove Installation - General....8
Gimballed Models....9
Built-In Models....10
Information for Grill Frame and Clasp ……
……11
Operating Your Stove....12
Lighting the Stove Top Burners....12
Lighting the Broiler....13

Care And Maintenance....14
Prolonged Lay-Up....14
Troubleshooting....15
Gas Smell....15
Inadequate Heat - Flame Burning Low or Gas Out....15
Ignition System Fails to Spark or Begins to Spark Slowly....16
Burner Control Valve Fails to Stay Open When Valve Control Knob is Released....16
Replacing The Thermocouple....17
Tools Required....17
General Information....17
Replacement Instuctions....18
To Replace the Electromagnet (Solenoid)....19
Hardware and Assemblies Diagrams....20
Plumbing and Wiring Schematic....21
Parts Breakdown....22
Limited Warranty....23
Warranty Registration Form....24

FORCE 10

2,3,4 Burner Stoves

Propane and Natural Gas Models

INTRODUCTION

Thank you for selecting the Force 10 Stove. Your unit was carefully inspected and tested at our factory. We take pride in producing one of the finest and safest gas stoves manufactured.

Because of the continuing refinement of our product designs, your stove may possess features not discussed in this manual. We have tried to supply all the information you might need, so please take time to read this manual before installing and using your unit.

Force 10 strongly advises against unauthorized modification of this product, but we do encourage you to correct problems that may arise by undertaking the simple repairs and maintenance described in this manual.

The most important reason for reading the manual carefully is that many of its instructions are essential to the safe operation of your stove.

Should any questions arise that are not addressed in this manual, we ask that you contact your dealer or Force 10, quoting both the model and serial number printed on the product identification label located on the side of your stove.

We welcome any opportunity to be of assistance:

FORCE 10 MARINE COMPANY.
23080 Hamilton Road
Richmond, BC Canada V6V 1C9
Tel: (604) 522-0233
Fax: (604) 522-9608
Email: sales@force10.com

Any recommendation or advice given by Force 10 Marine Company or any of its employees is solely an accommodation to the customer, and should not be relied upon by the customer without an independent verification of its applicability to the customer's particular situation.

SAFETY AND INSTALLATION

Some Force 10 Stove models are specifically equipped to burn Liquid Propane Gas (LPG), while other models are equipped to use Compressed Natural Gas (CNG). LPG

and CNG are **not** interchangeable fuels. It is therefore important to ensure that the model you have selected is the correct one for the type of fuel system you intend to use. If natural gas is used in a propane stove the burner flame will be inadequate for cooking. If propane is used in a stove fitted for natural gas, burner flame will be unacceptably and **dangerously** high.

Recommended installations for both LPG and CNG systems are outlined in this manual. Follow only the instructions that are applicable to your specific model of Stove. If, at some future date, you want to convert your LPG or CNG stove to the other fuel, a conversion kit can be obtained from Force 10. The model and serial number of your stove are required to obtain the correct kit.

Propane and natural gas are excellent and convenient galley fuels if used in accordance with the installation and safety procedures listed in this manual. If these procedures are ignored, there is a danger of fire and explosion. We have done our best to design and construct your Stove to be the safest marine stove available. You can do your part to ensure safety by following the installation and testing procedures.

All valves (both tank and solenoid) must be closed when the boat is unattended. They must also be closed **immediately** in any emergency. Force 10 recommends that manual cylinder valves be closed while appliances are not in operation.

Gas Pressures

Propane gas pressures can vary depending on country of origin. This may necessitate a change to your propane tank regulator and a need to adapt your stove to the new pressure. The following is a list of Orifices/By Pass and Propane pressures available.

Application	Gas	Pressure		Orifice Size (mm) / By Pass (mm)			
		mbar	Water Column	Small Burner (3400 Btu)	Large Burner (8200 Btu)	Broiler (5500 Btu)	Thermostatic Oven Burner (5100 Btu)
N. America Europe	Propane	30	12"	0.56/ 0.30	0.85/ 0.47	0.68/ 0.62	0.64/ 0.37
Europe	Propane	37	15"	0.52/ 0.30	0.82/ 0.47	0.62/ 0.62	0.60/ 0.37
N. America	CNG	15	6"	0.71/0.30	1.18/0.47	0.97/0.37	0.97/0.62

Our Stoves are built for North American propane pressure and orifice sizes, unless ordered otherwise. Adapter kits are available from Force 10.

Propane and Butane (LPG) Fuel System

** *Follow these instructions for propane model Stoves only*

1. Buy your cylinder, gauge, master solenoid valve and hose from a reputable marine dealer, or your local LPG service center. Do **not** use unreliable or worn-out equipment.
   We specifically recommend that only a high quality regulator be used with your Force 10 Stove. It must be set at 12" water column. A higher pressure could result in a dangerously high flame setting. If you question the quality or pressure setting of the regulator, please have it inspected by your local LPG service center.

2. Locate the cylinder and regulator in a housing vented to the open air (preferably on the deck or cabin top) isolated from the hull interior by a vapor tight enclosure.

   Propane is heavier than air. It can therefore accumulate at the bottom of enclosed compartments despite the provision of overhead ventilation. To allow it to safely drain overboard, the housing in which the cylinder is installed must be vented at the bottom. A pipe or hose of at least 1" (25mm) ID running on a downward slope to an outlet on the hull exterior is ideal. Position the vent above the water line, and at least two feet from any hull opening to the boat interior or engine exhaust.

   We recommend the installation of a vapor monitor on your boat with all propane fueled devices.

3. Propane is a two-phase (liquid/vapor) fuel, and only vapor withdrawal from the tank is safe. Firmly mount the cylinder, right side up, to ensure that liquid withdrawal does not occur.

4. We recommend that a solenoid valve, which can be controlled by a switch located in your cabin, be installed next to the manual cylinder valve. The cylinder valve outlet and the 9 or 12 VDC solenoid valve should be clean and dry when they are connected to each other.
   Unnecessary attempts to seal this connection with substances like pipe dope or Teflon tape can result in the introduction of foreign materials into the system that can plug the tiny appliance orifices.

5. Tighten the solenoid valve to the cylinder valve outlet properly. Use a 7/8" (22mm) or adjustable wrench - not a pair of pliers - and apply approximately 50 ft-lbs. (68Nm) of torque.

6. A 0-300 psi (0-20 bar) pressure gauge should be installed next to the solenoid valve on its downstream side. Again, the fittings should be clean and dry. It is not necessary to use pipe dope or Teflon tape for these connections.

7. Install the regulator downstream from the pressure gauge with its vent port pointing downward, which prevents spray or deck wash from entering the fuel system.

LPG System Installation

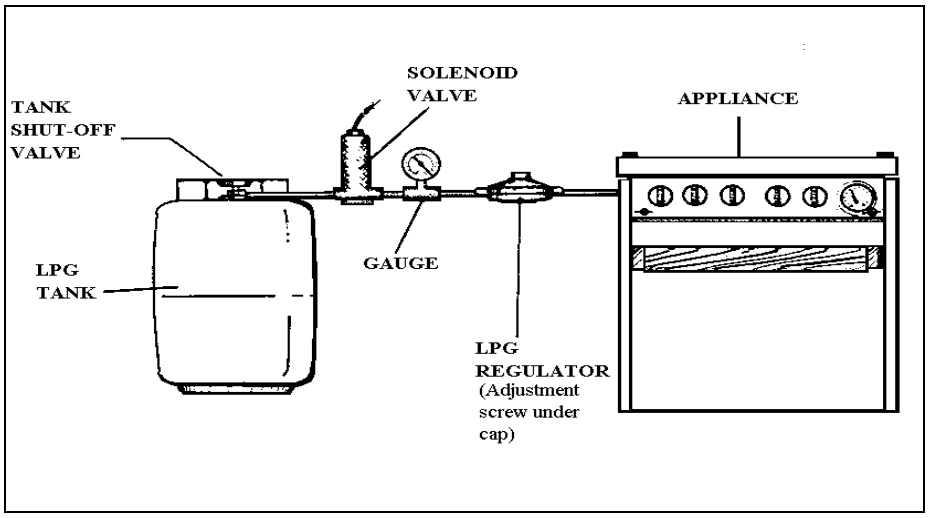

Recommended LPG System Installation

*** In some cases the solenoid valve is installed on the low pressure side of the system (i.e. after the LPG regulator). See solenoid manufacturers' instructions for proper installation.*

1. Starting from the propane tank itself, the fuel line attachments should occupy the following positions: (a) the tank shut-off valve, (b) the solenoid valve, (c) the pressure gauge, (d) the regulator, and (e) the stove itself.

2. Affix the caution label plate supplied with your Stove in the immediate vicinity of the gas cylinder in a place where it will be plainly visible.

3. If the stove is a gimbaled model, the gas supply line should be a flexible, fire-resistant hose, UL/CGA approved for use with propane systems, with 3/8" (10mm) forged female flare nuts machined crimped on each end.

   If your stove is a built-in style, you should use either soft copper tubing or a UL/CGA approved gas hose with 3/8" (10mm) forged female flare nuts machine crimped onto each end.

   Because every connection is a potential leak, the fuel line should be one continuous length of hose or tubing. Do **not** make a "T" off a fuel line between an existing appliance and the gas cylinder to feed another appliance. (You may install a "T" connection **only** within the fuel tank's enclosure, so any leakage is contained.)

4. Be sure you do not kink the hose or piping connecting the regulator with the stove by bending it too sharply during installation

5. Protect the hose against vibration and damage by securing it tightly to bulkheads and hull side with non-corrosive ties or clamps which will not cut, abrade or pinch it.

On gimbaled models, the last two feet (60 cm) of the downstream end of the hose should be unattached to bulkheads or the hull side to allow the stove to swing freely on its gimbals.

6. Fuel lines must be protected by close-fitting grommets and sealants where they pass through decks or bulkheads, and the passage must be made vapor-tight. They should be installed so that they are readily accessible to inspection.

Natural Gas (CNG) Fuel System

** *Follow these instructions for natural gas model Stove ONLY*.

1. Buy your cylinder, gauge, regulator and fuel line from a reputable marine dealer, or your local CNG service station. Do **not** use unreliable or worn-out equipment.

2. Choose a location for the CNG cylinder away from any potential fire hazards, such as a gasoline-fueled engine, a hot manifold or exhaust riser. Should the CNG cylinder be adjacent to a fire and the safety valve rupture disc reaches 212 °F (100 °C) and 3775 psi, the disc will rupture and the gas contained in the cylinder will add to the fire already in progress.

3. As CNG is always a vapor, all CNG cylinders are designed without a relief valve.

4. The CNG cylinder(s) should be securely mounted vertically or horizontally in an area accessible for easy operation of the cylinder valve, monitoring of the cylinder pressure gauge and the removal and replacement of the cylinder.

5. As each CNG cylinder contains less thermal energy than two gallons of alcohol or kerosene fuel, but without their potential hazard of liquid leaks or spillage into the bilge, the CNG cylinder may be located in the area of the boat which would be suitable for the location of a pressurized alcohol or kerosene tank.

6. The CNG cylinder valve outlet fitting does not require pipe dope or Teflon tape and should be clean and dry when attached to the regulation system nut to keep foreign materials out of the system.

   NOTE: By law the CNG cylinder valve outlet fitting with its protective cap and chain and the regulator system nut have **left-hand threads.** The cap and nuts are so marked with a slot.

7. Use a crescent wrench to tighten the regulation system nut to the CNG cylinder and valve connection. Tighten the nut as you would a welding tank or CO_2 cylinder, using approximately 50 ft-lbs. (68Nm) of torque.

8. If the CNG cylinder(s) is to be located on deck or exposed to water spray, point the regulation system so that water cannot run into the second stage (gray) regulator vent or into the body of the pressure gauge.

9. If the CNG cylinder(s) is to be located inside a cabin, enclosed in a lazarette hatch, or in an area with little ventilation, you must supply ample overhead ventilation in case of a leak or regulator malfunction.

10. Affix the caution label supplied with your Stove in the immediate vicinity of the cylinder in a place where it will be plainly visible.

11. The fuel line must be a type recommended for natural gas. This line may be purchased through any of the natural gas dealers in the USA. If you have any problems or questions regarding the fuel line or fuel system, contact:

East Coast	West Coast
Corp Bros., Inc. Brook Street Providence, RI 02903 Tel: (401) 331-8020	Gas Systems, Inc. 5361 Production Drive Huntington Beach, CA 92649 Tel: (714) 891-2411

See American Boat and Yacht Council Safety Standards for Small Craft, Section A-22 for recommendations covering CNG.
Copies may be ordered direct from A.B.Y.C., 3069 Solomon's Island Road, Edgewater, Maryland 21307. Telephone: (410) 956-1050. Baltimore line: (410) 974-8112. Fax: (410) 956-2737.

CNG System Installation

1. Push approved CNG hose onto the barbed brass fitting on the CNG outlet connection on the regulation system. Be sure the hose goes on all the way to the plastic guard. CNG hose seals well when it is pushed over the proper size barbed fitting - hose clamps are unnecessary and should not be used.

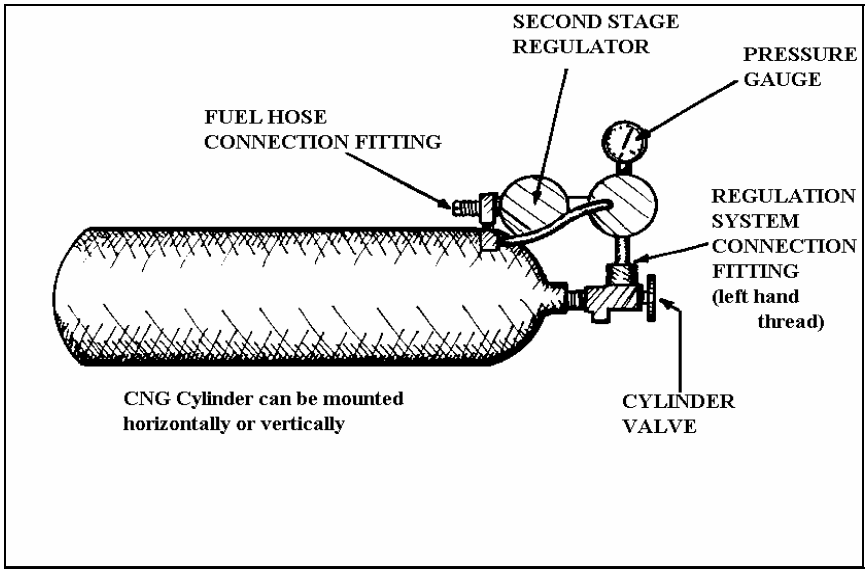

Recommended CNG System Installation

2. Run the hose from the CNG regulation system to the appliance with 6” minimum radius turns, so the hose does not kink and cut off or reduce the fuel supply causing unsatisfactory operation of the stove. Note: Fuel pressure is less than 0.217 psi (15 mbar).

3. Use only a continuous length of hose from the regulation system to the appliance with no tees or splices. Keep the number of fittings to an absolute minimum. Every connection is a potential leak!

4. Keep hose away from heat or abrasion. Use plastic ties or clamps to secure the hose to the boat structure or bulkheads. Fuel lines must be protected by close-fitting grommets and sealant where they pass through decks or bulkheads, and the passage must be made vapor-tight.

5. Installation should be such that it is readily accessible to inspection.

Fuel System Testing (LPG & CNG)

Test your fuel system for leaks **each time** the cylinder supply valve(s) are opened for appliance use. Use the following procedure for the test. First, close all stove burner valves by turning the controls to the **OFF** position. Next, open the manual cylinder and solenoid valves and make a note of the reading on the pressure gauge. Now close the manual cylinder valve. The pressure should remain constant for at least 10 minutes. If it does not, gas is leaking out of the system.

The leak(s) should be located by applying a mixture of liquid, detergent and water, to **all connections** and other suspect points and checking for bubbles. **Do not attempt to locate leaks by using an open flame**. Repair and re-test the system before putting it into operation.

For more detailed general instructions on the installation of Propane and CNG systems on boats, please refer to the American Boat and Yacht Council's pamphlets #A-1 and #A-22 respectively. These pamphlets may be ordered directly from A.B.Y.C., 3069 Solomon's Island Road, Edgewater, Maryland 21037. Telephone: (410) 956-1050. Baltimore line (410) 974-8112. Fax: (410) 956-2737.

Stove Installation - General

1. Before installing your stove, fill out the Warranty Registration Form that is printed on the last page of this manual and send it back to Force 10 within 10 days of purchase. **Keep your model and serial numbers handy, as they will be required when ordering parts or requesting assistance.**

2. Do not locate cabinet storage units or any combustible surfaces at any point directly above the stove.

3. Force 10 recommends a 30" (75 cm) clearance between the stove top and any unprotected combustible cabin top or bulkhead. This clearance may be reduced to a 20" (50cm) minimum if the overhead combustible surface is shielded with at least 1/4" (6mm) thick flame-retardant millboard topped with not less than No. 28 MSG sheet steel, 0.015" thick stainless steel, 0.024" thick aluminum, or 0.020" thick copper.

4. Gas consumes oxygen in the process of combustion. For this reason it is essential to **ventilate** any enclosure in which you plan to use your Stove. We recommend that at least nine square inches of fresh air ventilation be provided in the vicinity of the stove.

5. Your Stove is equipped with a thermocouple device that will automatically turn off the gas supply within 15 seconds to any burner that might be accidentally extinguished. Force 10 specifically warns that your stove should **not** be used as a cabin or space heater.

Force 10 manufactures a cabin heater specifically designed for the purpose of heating living space which is equipped with: an oxygen depletion sensor which will automatically turn off the gas supply if the oxygen level in the cabin should fall more than 5% below the normal level; a stack to exhaust combustion-produced water vapor and carbon dioxide, which would otherwise saturate the air and create a humid "greenhouse" atmosphere in the cabin interior (extreme condensation around portholes, hatches, and on the exposed side is the usual sign). For functional reasons, these features., essential to the safe and comfortable operation of a cabin space heater are not incorporated into the Stove.

6. The hinged burner grill and frame structure at the top of your stove will become very hot during operation of the stove top burners - do not attempt to swing up or lift it without wearing oven mitts. Keep children and pets away from the stove when it is hot.

7. The whole stove (including the oven door) becomes hot when the oven is being operated. The top portion of the **back** of the stove becomes very hot during oven operation. Do not contact it with unprotected skin.

8. Always keep a Class ABC fire extinguisher mounted close by your Stove. Grease fires should be extinguished by smothering them with baking soda, or by using the ABC Class fire extinguisher.

9. A heat disbursement plate is vital to the operation of the oven. You will find it inside the oven fastened to an oven rack, remove the strapping and place plate in the lowest shorter racks at the oven bottom with the curved side of the plate down.

Gimbaled Models

** *This section applies only to models designed for suspension from gimbal bolts.*

Be sure to install the gimbal wall brackets so that your stove will hang in the desired position in relation to both countertops and adjacent cabinets or bulkheads. 3" (76mm) clearance is required for free gimbal action.

Please refer to separate diagram and installation instruction sheet for the mounting dimensions and procedures for your specific model of stove.

After installing the wall brackets and placing the stove in position, mark hole position for the sliding pin gimbal lock and drill a 3/8" (10mm) hole. If the cabinet or fitting is not strong enough to hold the stove securely in the locked position, install a metal plate (supplied) or a wooden block with a 3/8" (10mm) hole.

The gimbal lock pin should be locked into the adjoining cabinet or bulkhead whenever the stove is not in use to prevent it from swinging in rough seas. The bolt can be locked into either the "in" or "out" position by turning the knob clockwise.

Built-In Models

** *This section applies only to built-in models.*

Please refer to separate diagram and installation sheet for the mounting dimensions and procedures for your specific model of stove.

On built-in model stoves, you must ventilate the back of the stove enclosure. This can be done by cutting holes at the side of the rear of the enclosure or across the back. Some people do a very neat job of installing our built-in stove, however, please realize your stove burners use a lot of oxygen. Therefore make sure you have access holes to supply plenty of fresh air, either below the stove or through the adjacent cabinet side panels. Minimum required area is 10 square inches (25 sq. cm).

On some models lift the hinged top burner grill and you will see the mounting hole.

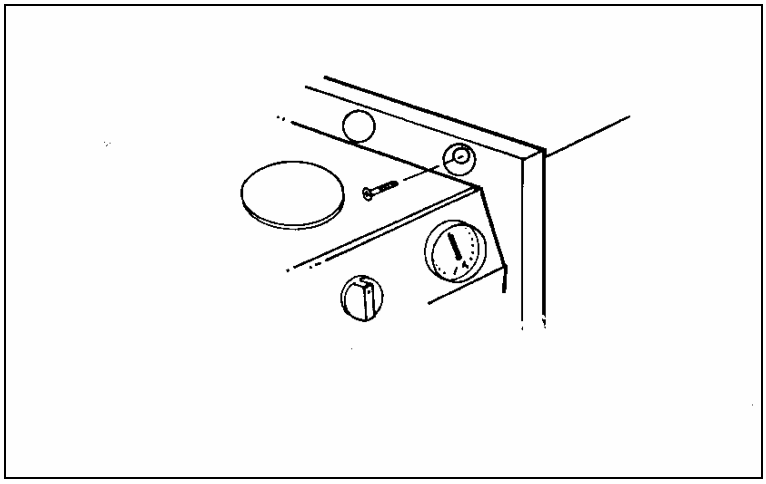

INFORMATION FOR GRILL FRAME AND CLASP

Your new Force 10 Marine stove maybe equipped with a removable grill frame assembly. It's purpose it to make the stove cleaning easier and to provide easier access for routine maintenance when required. It will still allow the rotation of the grill frame upward for clean up of small spills.

For safety purposes , prior to each use please ensure that the grill frame is properly placed onto the spools and that the clasp engaged and firmly in the down ward position.

When you receive your stove the grill frame should be attached and locked into place. Please inspect it to ensure that it is properly engaged.

Grill frame removal and installation. (refer to diagram following)

1. Rotate the two clasps located on each end of the grill frame up ward approximately 45 degrees until the clasp disengages the spool.

(The clasp when properly engaged will ride in the center slot of the round spool that is attach to the stove)

2. Once the clasps are disengaged lift the rear of the grill and at the same time pull it towards the front of the stove. This motion will allow the small hook sections of the grill frame to ride over the top of the spool.

3. The grill frame will now be free of the stove.

4. To replace the grill simply reverse the procedure.

5. Make sure that the clasps are open, then while holding the rear of the grill up slide the frame hooks over the top of the spools.

6. Push down the clasps so that they engage the spool center groove.

7. Check the alignment of the grill with the stove body, it should be square and feel secure and be able to rotate freely upward.

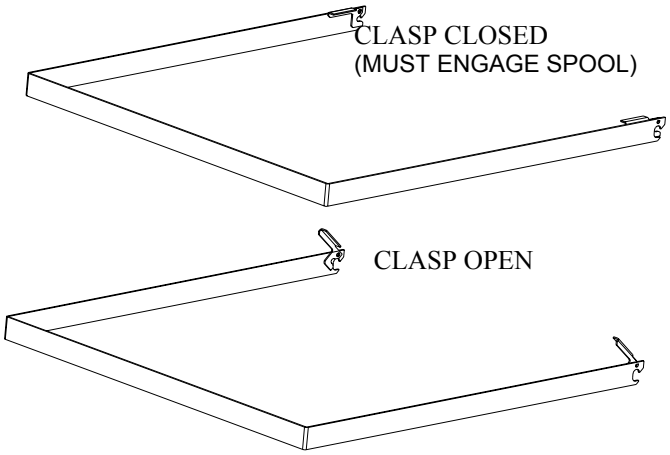

OPERATING YOUR STOVE

Lighting the Stove Top Burners

1. Before lighting, please ensure burner caps are placed on burners.
2. Read and comply with all gas safety instructions per this manual.
3. Turn all control knobs to the **OFF** position.
4. Open the manual cylinder and solenoid valves. (Turn the manual cylinder valve in the counterclockwise direction, and switch the solenoid valve to the open position.)
5. Push control knob as far as it will go and turn it counterclockwise to the **HIGH**, position until burner is lit. (On electronic ignition models pushing in the knob will start the spark, on other models you will need to depress the ignition button, or rapidly depress the piezo igniter, at the same time as you depress the knob.)
6. Sometimes the burner will sputter for a while before igniting. Give your stove 10-15 seconds to purge the air out of the gas line.
7. Continue holding the burner control knob all the way in for about twenty (20) seconds after ignition. This will heat the thermocouple and allow the gas valve to stay open. The thermocouple is designed to cut off the gas supply to the burner if the flame should accidentally be extinguished.
8. This arrangement also ensures that the stove is childproof to the extent that a simple twisting of the control knobs will not light any burners or allow gas to enter your boat.
9. If the ignition fails, turn the burner **OFF** and apply a lit match or lighter to it before turning it back to the **HIGH** position.
10. You should now be able to set the flame to any desired level between High and Low by turning the control knob further in the appropriate direction.
11. To turn off the burner, turn the control knob clockwise to the **OFF** position.
12. You must shut off both the solenoid and the manual gas cylinder valves whenever your vessel is unattended or if there is an emergency. Force 10 recommends that you also shut the cylinder valves off whenever your Stove is not in use.

Lighting the Broiler Burner (IF SO EQUIPPED)

1. Read and comply with all gas safety instructions per this manual.

2. Turn all control knobs to the **OFF** position.

3. Open the manual cylinder and solenoid valves. Turn the manual cylinder valve in the counterclockwise direction, and switch the solenoid valve to the open position.

4. Push control knob as far as it will go and turn it counterclockwise to the **HIGH**, position until burner is lit. (On electronic ignition models pushing in the knob will start the spark, on other models you will need to depress the ignition button, or rapidly depress the piezo igniter, at the same time as you depress the knob.), hold the knob down until the burner is lit. Continue holding the burner control knob all the way in for about twenty (20) seconds after ignition. This will heat the thermocouple and allow the gas valve to stay open. The thermocouple is designed to cut off the gas supply to the burner if the flame should accidentally be extinguished.

5. Remember that broiling is a rapid process. Check your food often, and do not run the broiler for more than **20 minutes** at a time.

CARE AND MAINTENANCE

Your Stove is constructed of one of the hardest, corrosion-resistant stainless steels available. However, the surfaces can be damaged if the proper care is not given. Please follow these maintenance suggestions and you will have a good looking appliance for years to come.

1. Do not use any abrasive chemical cleaners on the inside or outside of your stove. Any household liquid cleaner is recommended.
2. Use a clean cloth or sponge to apply cleaners.

3. Remove stains as quickly as possible before they become "set".

4. Do not let food spills or burnt foods build up on any surface of your stove.

5. You can use a household oven cleaner for the oven, but remember to follow the product manufacturer's directions.
6. Do not use steel wool or SOS-type pads to clean any part of your stove. These products will embed fine steel particles in the surface of the stainless steel causing it to "bleed" (rust) in a marine environment. Use bronze wool or some other nonmetallic abrasive if you must. Be aware, however, that your stove has a fine finish that can be scratched by some abrasive pads or cleansers.
7. If you purchased our optional bronze griddle to go with your Stove, you should be able to keep it clean using regular dishwashing detergent. We also recommend you use brass wool to keep it looking nice - rubbing with the grain. Do not use a copper polish or you will end up with green eggs and ham.

PROLONGED LAY-UP

The Force 10 Stove has been designed to have a long life with every day regular use. However, if you leave your boat unattended for a long period of time, particularly in high heat and humid conditions, the high temperature lubricant in the gas control valves may settle, resulting in difficulty in turning the control valves and possibly seizure of the valve.

In the event this should occur do not use force to free-up the valve stem. It is best to remove the control panel from the stove by first pulling off the control knobs and removing the thermometer if the stove is supplied with one, it will pull out. Remove the two small Phillips head screws on the front of each control valve. Once this is accomplished, you can remove the cap that holds the valve stem in the valve body. Inside the body is a shaft that may also be dirty. Using a pair of tweezers, remove the shaft. **Remember its orientation inside the valve.** Carefully clean the valve stem and shaft using warm water or alcohol. Replace the shaft back in the valve, ensuring it is in the proper position. Lubricate the valve stem with a high-temperature lubricating grease (a small amount will do) and replace the valve and its associated cap. Secure the screw and replace the control panel.

Note: Do a soap test on the valve after assembly to ensure there are no leaks.

TROUBLESHOOTING

If something should go wrong with the operation of your Stove, do not despair! Read this section carefully and follow our suggested remedies.

If these suggestions do not resolve the difficulty contact Force 10 directly, or consult your dealer, quoting the model and serial number of your Stove. The serial number on gimbaled models can be found on the bottom outside right panel, and on the built-in models it is on the bottom inside left panel.

Gas Smell

1. Extinguish all open flames and smoking materials.
2. Close both manual and solenoid cylinder valves.
3. Make sure that all appliance valves are closed.
4. Ventilate all interior compartments thoroughly. Use a fan to push the air from the bottom of all compartments.
5. Maintaining as much ventilation as possible, open cylinder valves. Making sure that the appliance valves are still **closed**, apply a mixture of liquid detergent and water to all connections, checking for bubbles indicating a leak. Do **not** use a flame to check for leaks.
6. When repair of the leak(s) has been completed, test the system with the aid of the pressure gauge, using the procedure previously described for Fuel System Testing

Inadequate Heat - Flame Burning Low or Gas Out

1. Your system may be low on fuel - check your tank pressure gauge.
2. The gas cylinder valve may not be fully open - make sure the handle is turned as far as it will go in the counterclockwise direction.
3. The burner orifice(s) may be obstructed, this is most commonly seen in the oven burner,- when cold, remove the orifice with a 7mm wrench (refer to #56 on page 20) For stove top burners unscrew the two screws holding down the burner cap. You can now lift up the cap and flame spreader and see the brass orifice in the bottom of the air cup. Remove the orifice with a 7mm socket. Clean out the orifice and reinstall the orifice, flame spreader and burner cap. Take care not to force or cross thread anything. If the broiler orifice needs to be cleared, added caution must be taken. Only use alcohol or a Q-tip to clean the orifice. **Never use metal to clean the orifice** .
4. Sometimes LPG gas will not flow as readily if the outside temperature is very low - i.e. below freezing.

Ignition System Fails to Spark or Begins to Spark Slowly

** *Does not apply to models without broiler, which have piezo ignition.*

1. Check the AA 1.5 volt battery located at the bottom inside right stove side on most stoves, can be in other locations depending on your model, to ensure that it is still supplying power and installed correctly. Install a new battery if necessary. If none of the spark plugs will spark after the battery is checked or replaced you may need to order a replacement spark ignition box from Force 10.
2. Check to see whether there is 3/32" (2mm) gap between the spark plug head (which should be clean) and the burner rim, and that all the wires are securely connected to the spark ignition box located midway down the backside of the stove. A quick way to check is to press any control knob, and look to see if spark is sparking between terminals.
3. Check the operation of each switch with a circuit tester. Remove control knobs and faceplate and check the wire connections at the back of the spark ignition switch harness.
4. Sometimes a minor nick in the wire will cause a short so the spark plug will not spark at that burner. Remove the stove so that each spark ignition connecting wires can be checked for shorts.

Sometimes the burner will sputter for a while before igniting. Give your stove 10-15 seconds to purge the air out of the gas line.

Burner Control Valve Fails to Stay Open When Valve Control Knob is Released and Burner Flame Extinguishes

Remember: The Burner Control Knob must be held all the way in for twenty (20) seconds after ignition in order to heat the thermocouple and allow the gas valve to stay open.

There could be a problem with the thermocouple. The small upright attachment next to the burner on the stove top is one end of the thermocouple. Test operation of thermocouple. A simple way of testing the thermocouple is to ignite the burner with the control knob removed from the valve stem. Using your fingers directly on the valve stem, depress, turn to high, and light the burner. If it stays lit after 20 seconds the thermocouple is working properly. If the burner does not stay lit when using the control knob, it is possible that the knob is contacting the face plate before the valve stem is fully depressed. Remedy this by adjusting the position of the knob on the valve stem.
A thermocouple consists of two dissimilar metals joined together at the sensing end. These metals are in contact with each other only at the point that is exposed to the burner flame. When this point is heated by the burner flame a small amount of electricity is generated. This electric current flows to the other end of the thermocouple that is connected to the gas valve. Here it activates an electromagnet that keeps the valve open. Should the burner accidentally be extinguished electricity will no longer be generated and the valve will be snapped back to the closed position by a stainless steel spring. This is normally an isolated problem as all thermocouples and stoves are tested at the factory.

If necessary, however, remove the thermocouple following the instructions 1 through 14 below. Lightly sand the end that has been removed from the valve with very fine sandpaper. Replace in the valve and test. If this does not work the thermocouple must have failed and will have to be replaced.
You can also test the thermocouple by removing the end from the valve. Heat up the other end with a torch or another burner on your stove. By using a good quality voltmeter, put one lead on the outside of the thermocouple and the other one on the far cold end. If the thermocouple is okay, it will show a reading on your meter.
If the thermocouple appears to be operating properly after testing, the electromagnet (solenoid) inside the valve which contains a stainless steel spring may be defective and require replacement.

REPLACING THE THERMOCOUPLE

Tools Required - Phillips Screwdriver
- 5/16" (8mm) Open Wrench or Crescent Wrench
- 3/8" (10mm) Open Wrench

General Information

1. Thermocouples are made out of two dissimilar metals. One end of each metal is fastened together. When this connection is heated up, a small amount of electricity is created and can be measured between the other two ends of these wires.
2. Two different styles of thermocouples are used. In one style the outside of the thermocouple is connected to a copper tube, which acts as a conductor. The inside is an insulated nickel wire, which at the other end, is separated from the copper by a very small insulating washer. Using a small brass fitting this end of the thermocouple screws into the gas valve, which contains an electromagnet.
3. In the other style the outside of the thermocouple is connected directly to the metal burner housing which is connected to the metal frame of the appliance that acts as a conductor. The other conductor is an insulated wire. Using a spade type connector this end is connected to the gas valve, which contains an electromagnet.
4. When the thermocouple is heated, the electricity generated attracts the electromagnet in the valve and holds the valve open. If the flame is accidentally extinguished, the thermocouple cools, causing the electromagnet to spring back and close the valve.
5. If the thermocouple is not holding the valve open, check first that it is screwed into the valve tightly enough, as a loose connection will not transfer the voltage. If it has been tightened too much, the insulating washer will be crushed, shorting out the thermocouple. Ideally, the nut should be installed finger tight, plus a 1/4 turn with a wrench.

Replacement Instructions

1. Swing the grill frame into the upright position. Make sure it is secure. (or remove it if so equipped)
2. Remove the screws (two Phillips screws) that hold the burner caps and flame spreaders down and lift off each cap and spreader.
3. Gently remove the studs that hold the top tray to burner housings using a 5mm socket (two on each burner) , **do not force**.
4. Remove the screws at the top front edge of the top tray. These secure the front face panel.

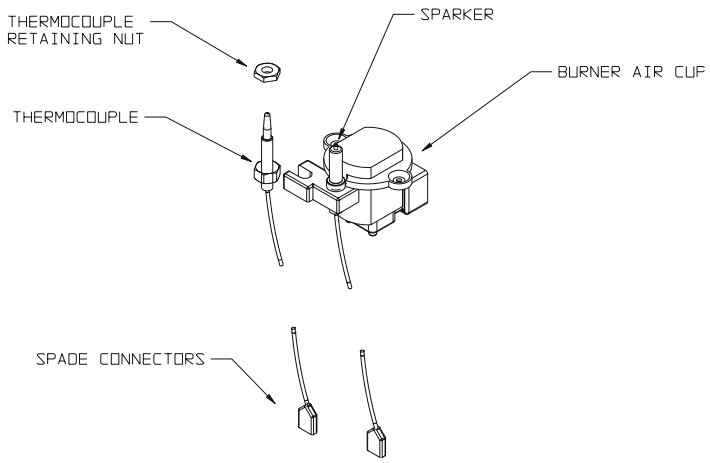

5. Remove screws on top side edges.
6. Now lift the top tray off the stove exposing the burner housings.
7. All the top burners use the thermocouple with spaded type connection to the gas valves. The spade connector attaches to the back of the valve under a small plastic cap. To disconnect, slide the spade off the tab in the direction of the spade stem.

   The oven burner and broiler use the copper tube type thermocouple. Remove the thermocouple end from the thermostatic valve using a 5/16” (8mm) wrench or small crescent wrench.
8. Depending on the thermocouple type use a 3/8” (10mm) or (8mm) open wrench or crescent wrench, loosen the hex nut connecting the thermocouple to the burner until the thermocouple is loosened from the burner. Replace the thermocouple and proceed to Step 9
9. Reverse the above procedure, for spade type connector simply attach the spade to the tab at the back of the valve with a sliding motion. When fitting copper type

thermocouples be extremely careful when putting the end of the thermocouple into the valve. If you turn too tightly you will crush the insulating washer and need another new thermocouple. Ideally the nut should be installed finger tight plus a 1/4 turn with a wrench. **Do not force or cross thread anything.**

10. Make sure all gas lines, spark ignition wires, and thermocouples are not touching anything sharp.
11. When it is all back together, mix some liquid soap and water and do your standard test for leaks with your fuel system pressurized, and all control knobs turned to **OFF.**

To Replace the Electromagnet (Solenoid) (#1 or #61)

When you remove the thermocouple from the control valve, remove the larger nut with a (17mm or 21mm) wrench. The electromagnet should fall out - if not, push the shaft where the knob should be and it will come out easily. Install the new electromagnet with the spring end first. Replace the nut, and re-install thermocouple back into the control valve.

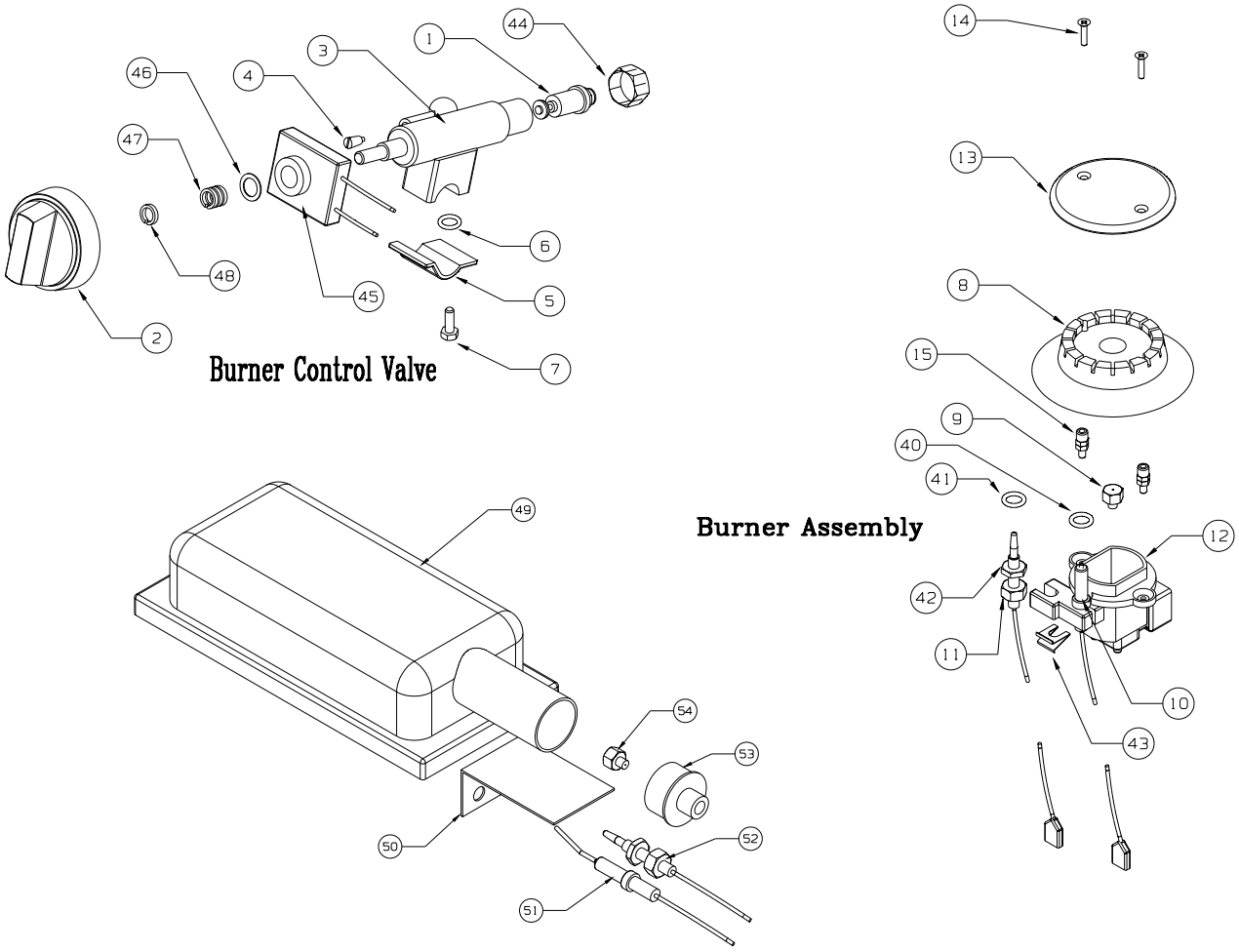

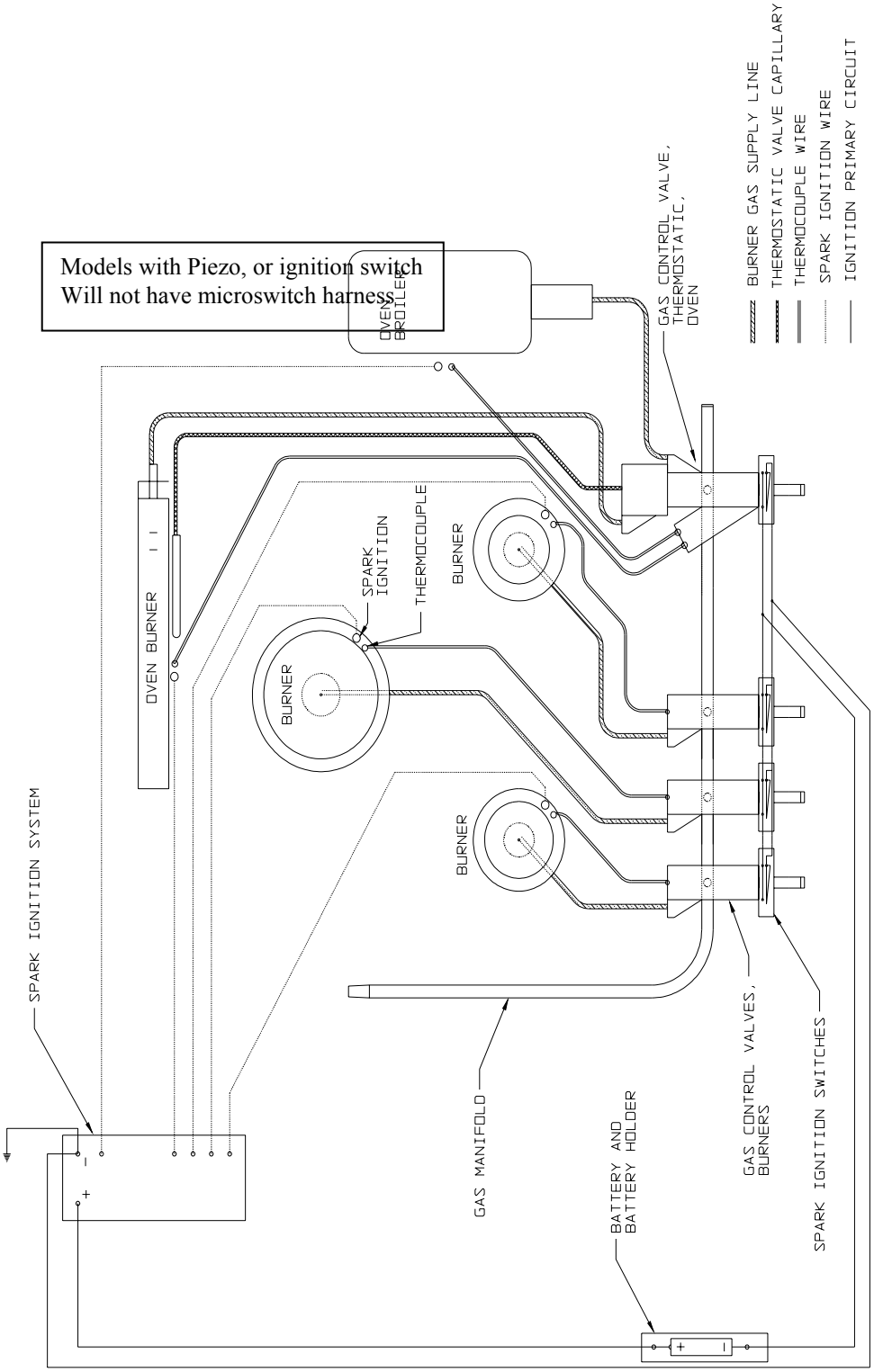

TYPICAL PLUMBING AND WIRING
(INCLUDES MODELS WITH OVEN)

PARTS BREAKDOWN

Number	Description	Part Number	Number	Description	Part
1	Solenoid (Valve)	89255	40	Sparker gasket	89206
2	Control knob	89248	41	Thermocouple gasket	89207
3	Valve for small burner	89212	42	Thermocouple nut	89202
	Valve for large burner	89213	43	Sparker hold down clip	89211
4	By pass	**	44	Solenoid cap nut (Valve)	89254
5	Valve Clamp	89234	45	Ignition switch harness	**
6	Gasket for valve	89205	46	Washer	89232
7	Clamp bolt	89235	47	Spring	89312
8	Flame spreader small		48	E – clip	89233
	Flame spreader large		49	Broiler	890051
9	Orifice	**	50	Thermocouple/Sparker bracket	50503
10	Burner sparker	89200	51	Sparker – Broiler	89066
11	Thermocouple		52	Thermocouple – Broiler	89074
12	Burner housing small	89224	53	Orifice holder	89084
	Burner housing large	89220			
13	Burner Cap small		54	Orifice – Broiler, 30mbr	89237
	Burner Cap large				
14	Hold down screws	89217			
-	Spark ignition box 4 outlet (60130,1) (60140,1)	890611			
-	Battery holder (60130,1) (60140,1)	870011			
-	Piezo (60100,1)	89050			
-	Piezo (60120,1)	89050			
-	Piezo (60150,1)	89051			

** Specify burner, stove model, and serial number when ordering.

LIMITED WARRANTY

Force 10 Marine Company warranties new products to the original consumer to be free from defective material(s) and workmanship while under normal use and service. This limited warranty extends for the following periods:

Propane / CNG Gourmet Galley Ranges	Two (2) Years
Propane / CNG Cooktop Stoves	Two (2) Years
Propane / CNG Cozy Cabin Heaters	One (1) Year
Propane Direct Vent Cabin Heaters	One (1) Year
Barbecue Grills	One (1) Year
Water Heaters	One (1) Year

Terms and Conditions

During the warranty period Force 10 Marine Company will, at its option and without charge, repair and/or replace but not remove or re-install the faulty product

The buyer will return defective products to the address stated below. No product will be accepted by Force 10 Marine Company without prior written or verbal authorization, and in accordance with instructions from Force 10 Marine Company. An authorization number must accompany returned merchandise. Return of defective products must be accompanied by written details of the problems and proof of purchase.

The buyer shall be responsible for shipping and insurance charges, if any, on the products returned for repair under the terms of this warranty. Force 10 Marine Company will pay shipping of products returned to the buyer.

This limited warranty applies only to products that have been installed and used in accordance to printed instructions of Force 10 Marine Company and does not cover improper use, vandalism, negligence or accidents.

As some states do not allow limitations on the length of an implied warranty nor limitations or exclusions of incidental or consequential damages, the above limitations or exclusions may or may not apply. This warranty gives you specific legal rights and you may also have other rights that vary from state to state.

Model No._____ Serial No._____

This Stove has been built to operate with the following pressure:

Propane/Butane:_____mbar. Natural Gas:_____mbar.

FORCE 10 MARINE COMPANY
WARRANTY REGISTRATION FORM

FORCE 10 is a registered trademark of Force 10 Marine Company

Purchaser's Name: _____
Address: _____
City: _____ State/Province: _____
Country: _____ Zip/Postal Code: _____
Telephone: _____

Model No.: _____ Serial No.: _____
Date Purchased: _____
Purchased for (Boat Model): _____

Purchased from (Dealer): _____
Dealer's Address: _____
City: _____ State/Province: _____
Country: _____ Zip/Postal Code: _____
Telephone: _____

Purchaser's Signature: _____ Date: _____

This Warranty Registration must be completed and mailed, within ten (10) days from date of purchase, to:

FORCE 10® MARINE COMPANY
23080 Hamilton Road
Richmond, BC Canada V6V 1C9
Tel (604) 522-0233
Fax (604) 522-9608