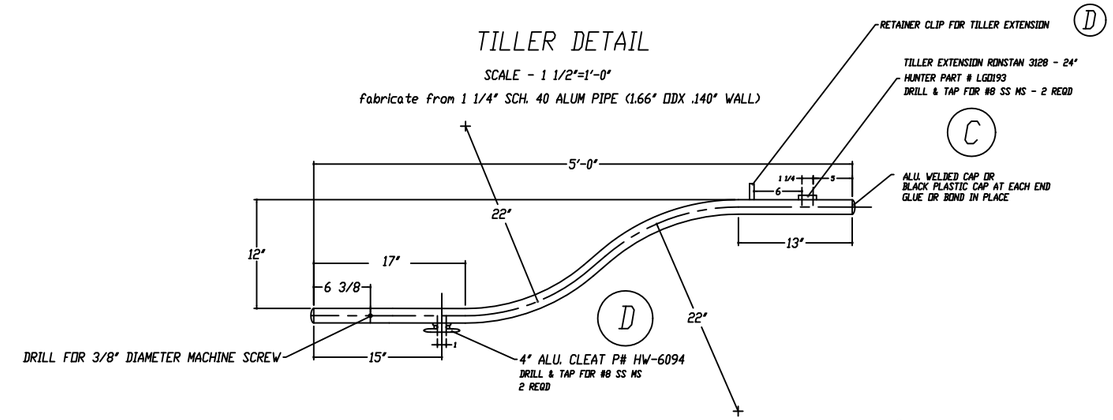

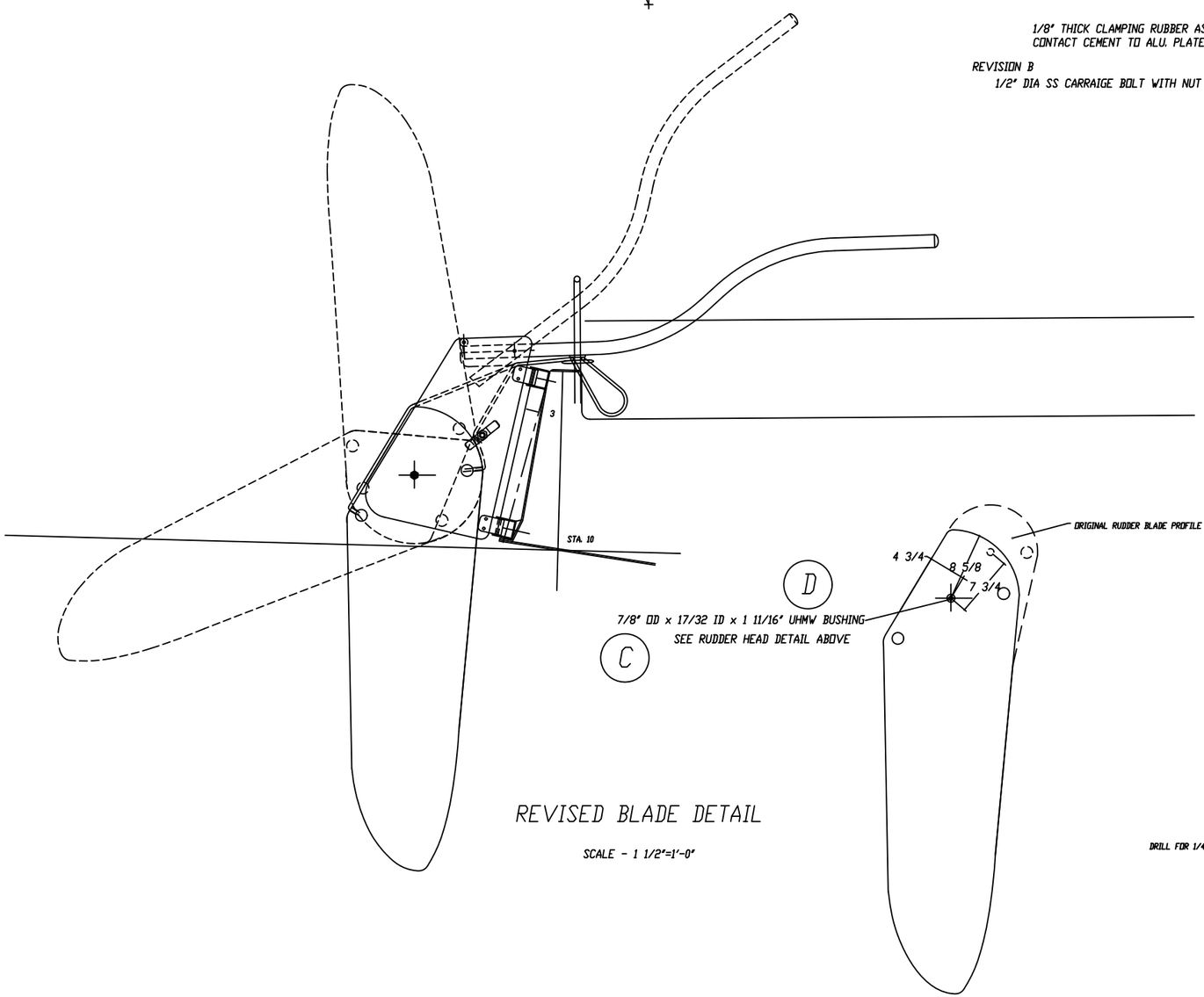

REVISED BLADE DETAIL

SCALE - 1 1/2"=1'-0"

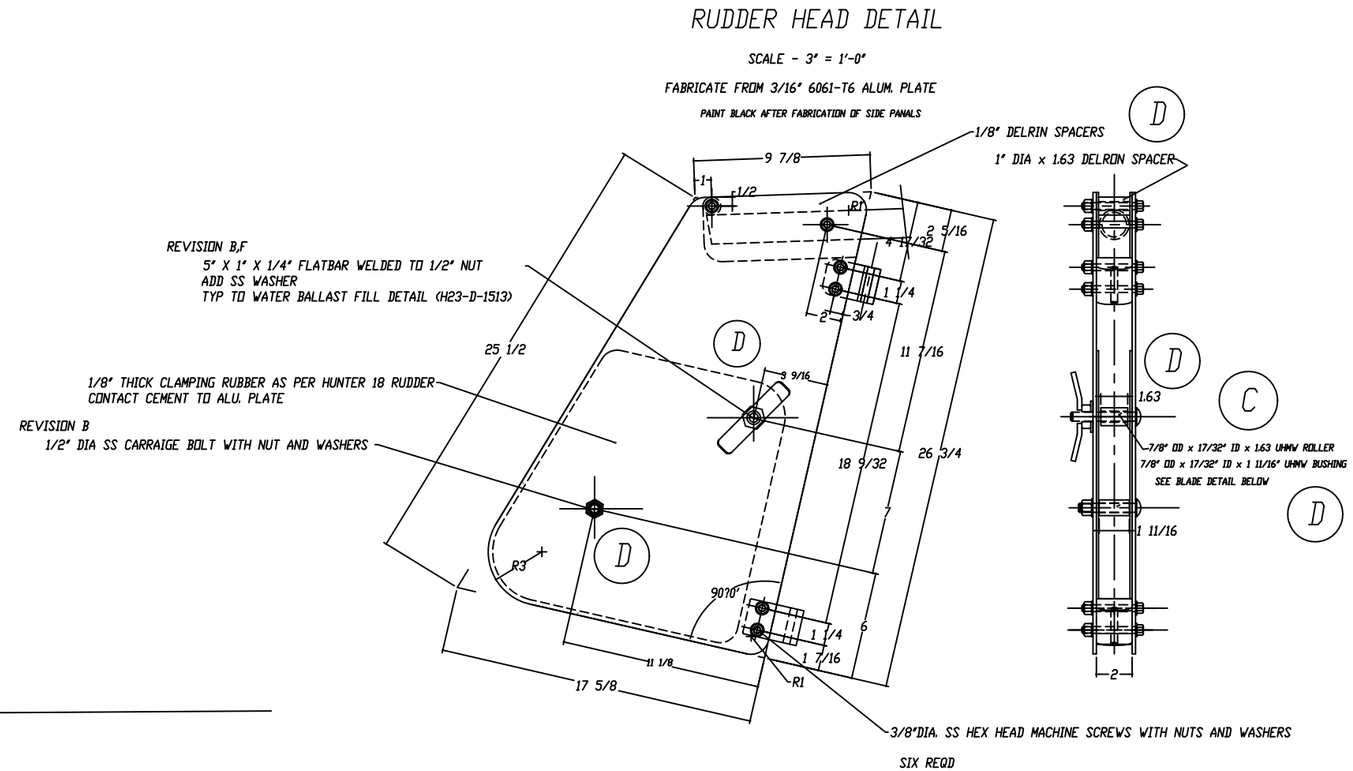

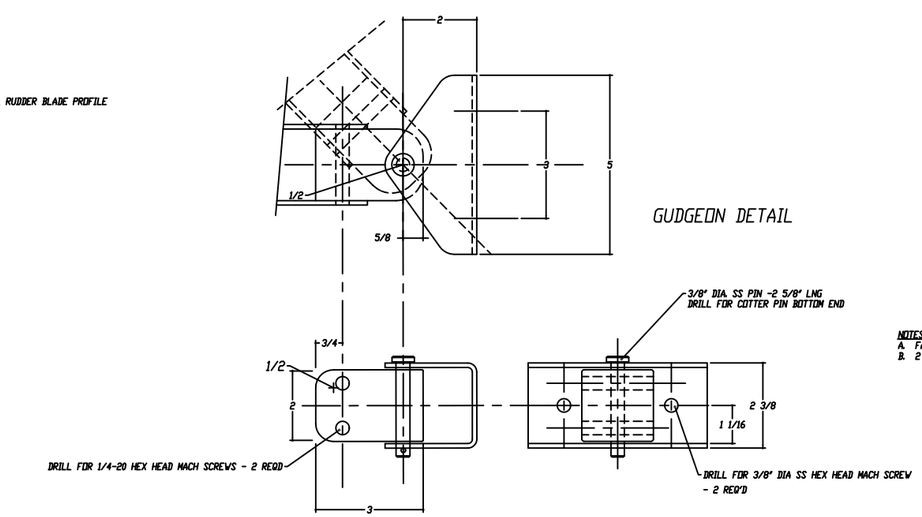

NOTES
A. FABRICATE FROM 1/8" SS PLATE, UHMW BLOCK
B. 2 GUDGEONS PER BOAT

SYMBOL	REVISIONS	DATE
H	ADD MAST CLUTCH PIPE	11/16/92
G	DELETE CHANNEL	9/30/92
F	ADD SPRG NUT. CHANNEL	9/10/92
E	CHG GUDGEON TUBE	10/20/92
D	ADDED COIL AND MOVED BUSHING	8-27-92
C	BUSHING	7/21/92
B	ADD CARRAGE BOLTS	7/17/92
A	ADD CLUTCH PIPES	7/13/92

PROPRIETARY INFORMATION This document discloses information for which HUNTER MARINE CORP. has proprietary rights.

DO NOT SCALE

TOLERANCES UNLESS OTHERWISE SPECIFIED
FRACTIONAL ± N/A
2 PLACE DECIMAL ± N/A
3 PLACE DECIMAL ± N/A
4 PLACE DECIMAL ± N/A
ANGULAR ± N/A
BREAK ALL SHARP EDGES, DEBURR
FINISH 7/8/92

HUNTER

DRAWING TITLE: H23.5 REVISED RUDDER

PAPER SIZE	DRAWN BY	DATE	SCALE
D	RLM	JULY 8/92	1.5"=1'-0"

PLOT SCALE	HUNTER PART NO.	DRAWING NO.
.25=1	N/A	H23D1138