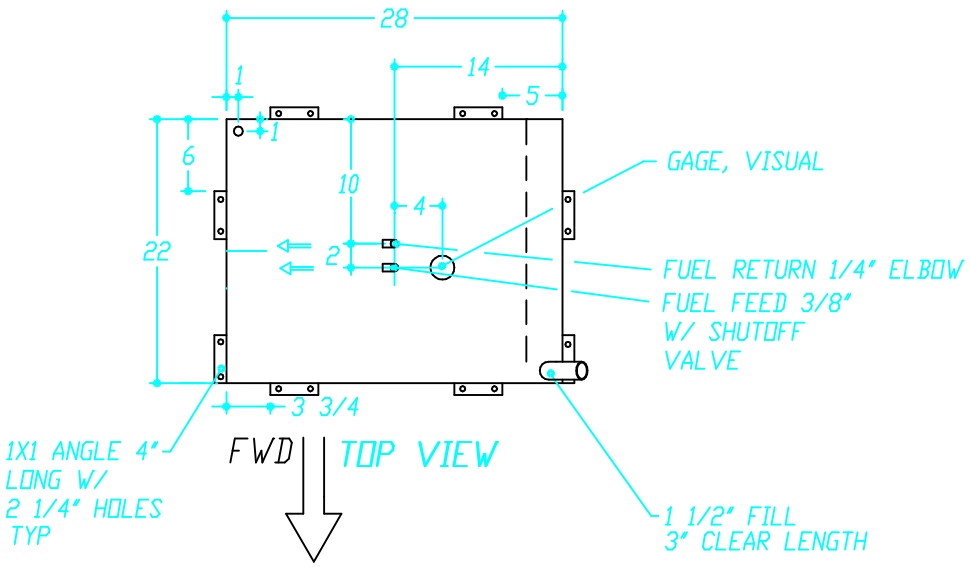

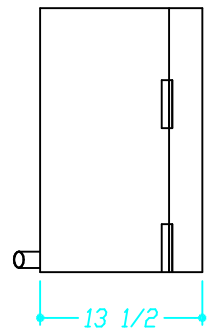

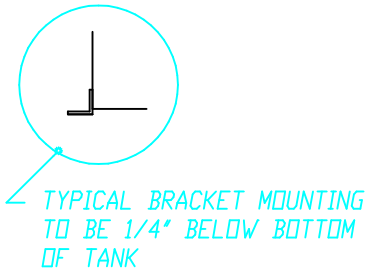

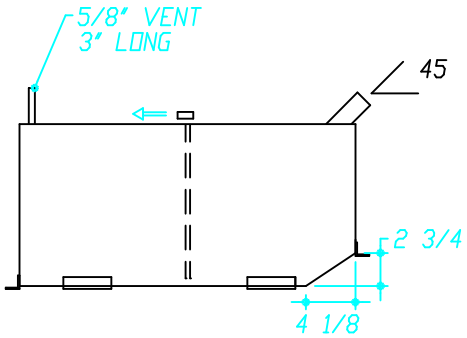

FWD FACE

NOTES

MATERIALS; 6061-T6 OR 5456 ALUMINUM
QUANTITY; (1) PER BOAT
CAPACITY; APPROX 35 GALLONS
BAFFLE TO USCG REGULATIONS

SYMBOL	REVISIONS	DATE
C	ADDED BRACKETS	2-14-91
B	MOVE FITS.	1/26-90
A	GENERAL CHANGES	1/4/90

PROPIETARY INFORMATION: This document dicloses information for which HUNTER MARINE CORP. has propietary rights.

DO NOT SCALE

TOLERANCES UNLESS OTHERWISE SPECIFIED:

FRACTIONAL	±	N/A
2 PLACE DECIMAL	±	N/A
3 PLACE DECIMAL	±	N/A
4 PLACE DECIMAL	±	N/A
ANGULAR	±	N/A

BREAK ALL SHARP EDGES, DEBURR

FINISH: N/A

HUNTER

DRAWING TITLE: H37.5 FUEL TANK

PAPER SIZE	DRAWN BY:	DATE:	SCALE:
A	SKIP	11/14/89	3/4=12

PLOT SCALE:	HUNTER PART NO.	DRAWING NO.
.0625=1	N/A	H37A1909