SYMBOL	REVISIONS	DATE	NAME

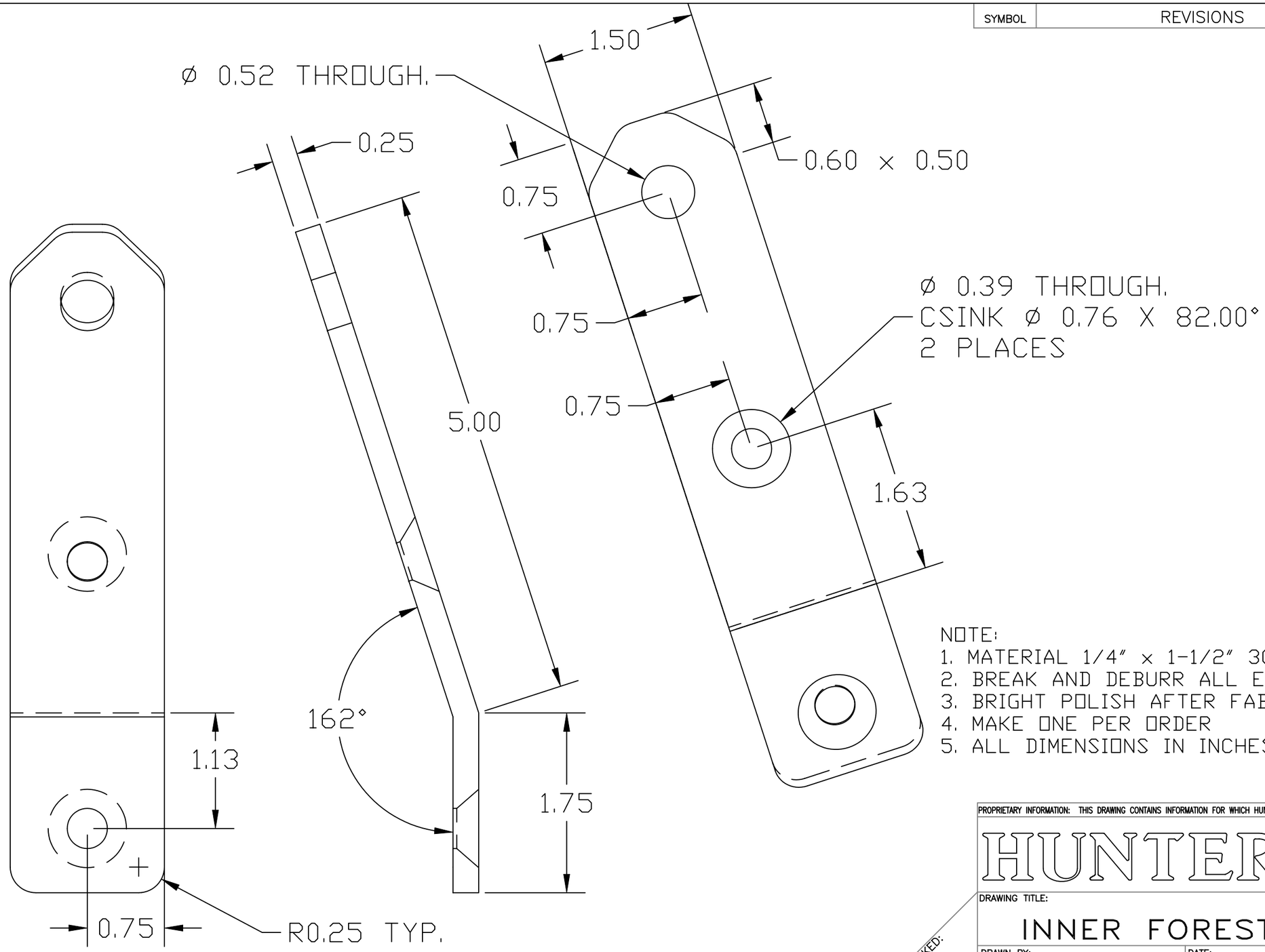

NOTE:
1. MATERIAL 1/4″ x 1-1/2″ 304 SS FLATBAR
2. BREAK AND DEBURR ALL EDGES.
3. BRIGHT POLISH AFTER FAB.
4. MAKE ONE PER ORDER
5. ALL DIMENSIONS IN INCHES

PROPRIETARY INFORMATION: THIS DRAWING CONTAINS INFORMATION FOR WHICH HUNTER MARINE CORPORATION HAS PROPRIETARY RIGHTS.

HUNTER 410

DRAWING TITLE:

INNER FORESTAY TANG

DRAWN BY:	DATE:	SHEET
KJC	5/15/97	1 OF 1

SCALE:	HUNTER PART NO.	DRAWING NO.
FULL	N/A	410-20026

CHECKED: