NOTES:
1. MATERIAL: 304 S.S. AND 316 S.S. BOLT
2. BREAK AND DEBURR ALL EDGES AND SHARP CORNERS.
3. BRIGHT POLISH AFTER FABRICATION.
4. MAKE TWO PER BOAT.

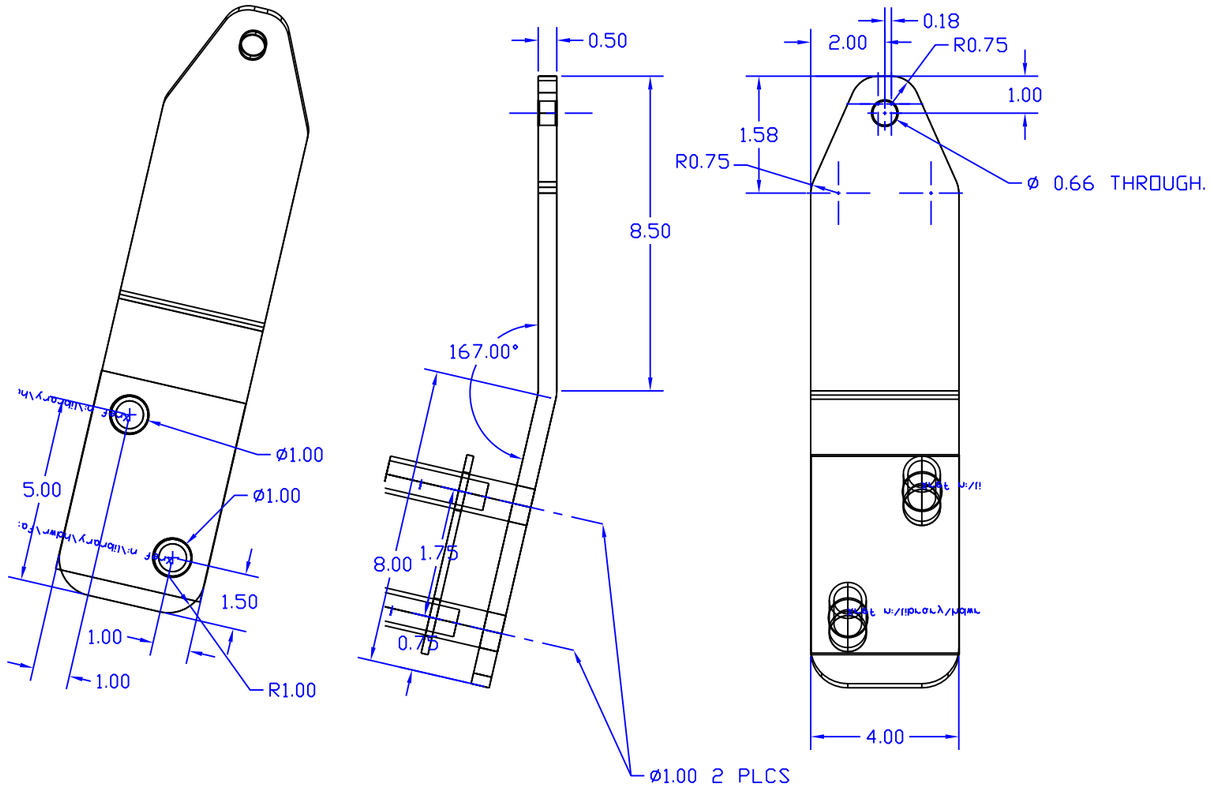

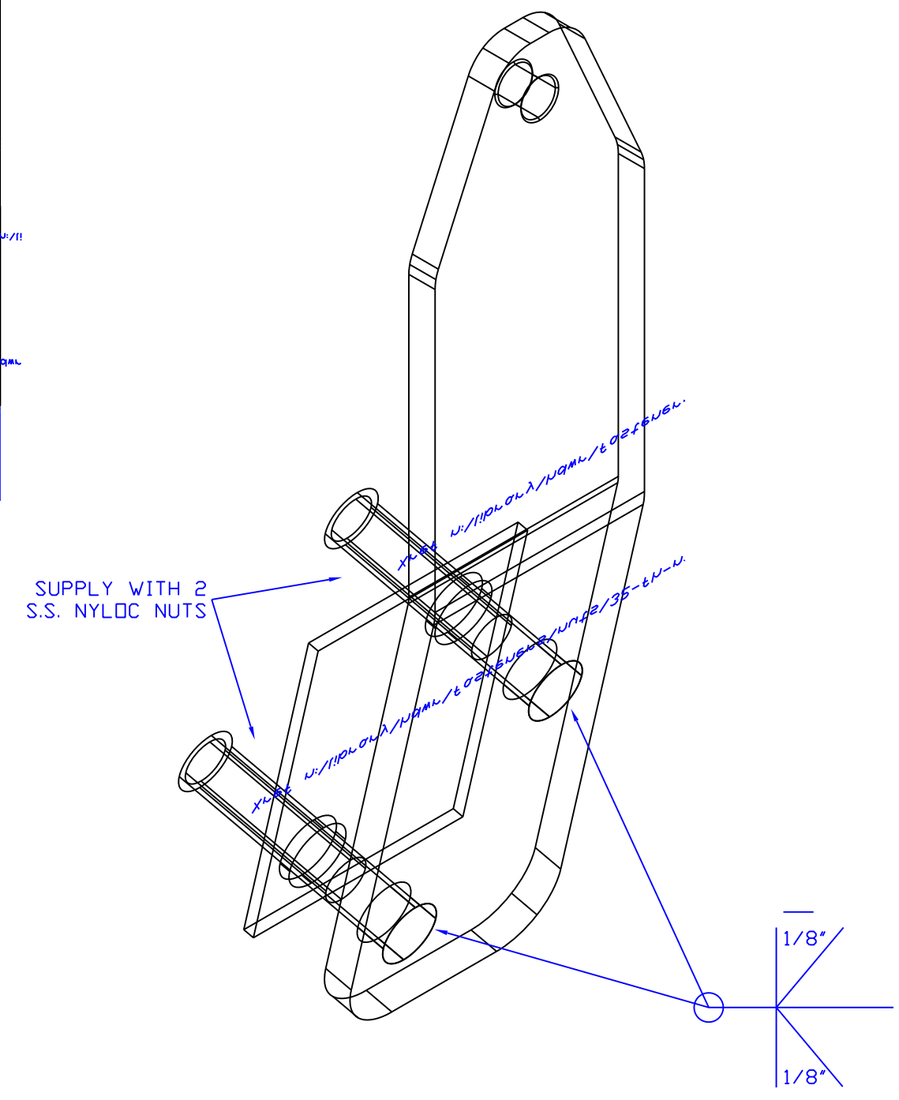

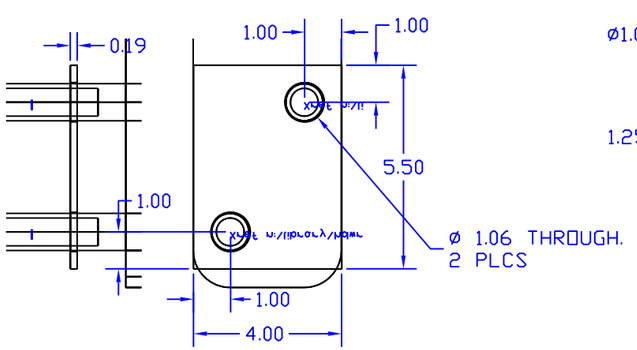

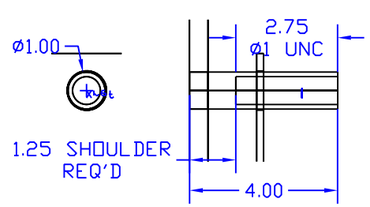

SYMBOL	REVISIONS	DATE	NAME

PROPRIETARY INFORMATION: THIS DRAWING IS THE PROPERTY OF HUNTER MARINE AND MUST NOT BE COPIED OR DISCLOSED WITHOUT WRITTEN PERMISSION.

HUNTER

DRAWING TITLE: P450 STRAP STYLE CHAINPLATE

DRAWING NO.	4462074A	REVISION NO.	
SHEET	1 OF 1	MASTER PART NO.	
DRAWN BY:	KJC	CHECK'D BY:	
DATE:	1/14/97	DATE:	
REV SCALE:		REPRO SIZE:	D
SCALE:	HALF		