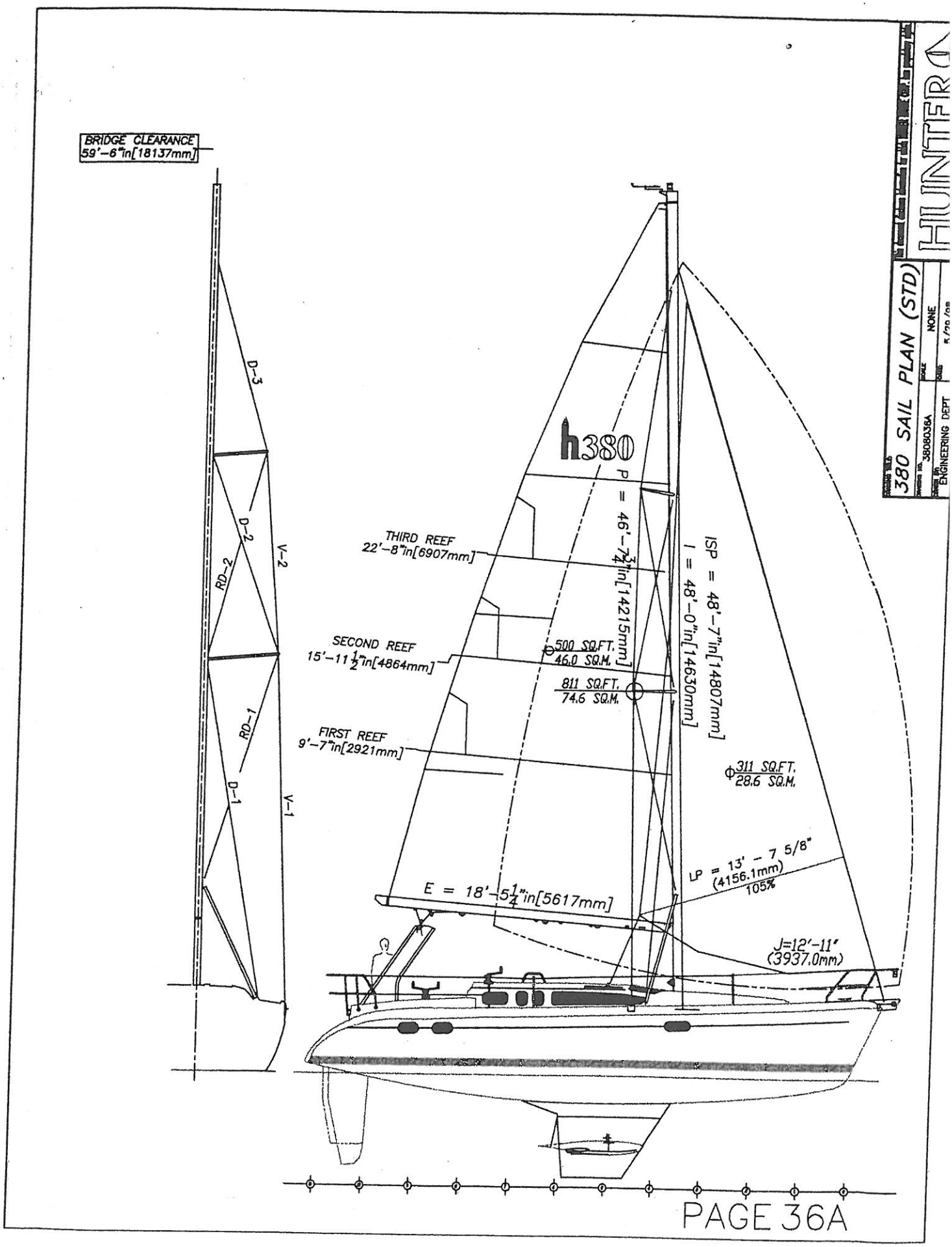
BRIDGE CLEARANCE
59'-6"in[18137mm]
D-3
D-2
RD-2
V-2
RD-1
D-1
V-1
h380
P = 46'-7 3/4"in[14215mm]
THIRD REEF
22'-8"in[6907mm]
SECOND REEF
15'-11 1/2"in[4864mm]
FIRST REEF
9'-7"in[2921mm]
500 SQ.FT.
46.0 SQ.M.
811 SQ.FT.
74.6 SQ.M.
ISP = 48'-7"in[14807mm]
I = 48'-0"in[14630mm]
311 SQ.FT.
28.6 SQ.M.
LP = 13' - 7 5/8"
(4156.1mm)
105%
E = 18'-5 1/4"in[5617mm]
J=12'-11'
(3937.0mm)
380 SAIL PLAN (STD)
3808036A
NONE
ENGINEERING DEPT

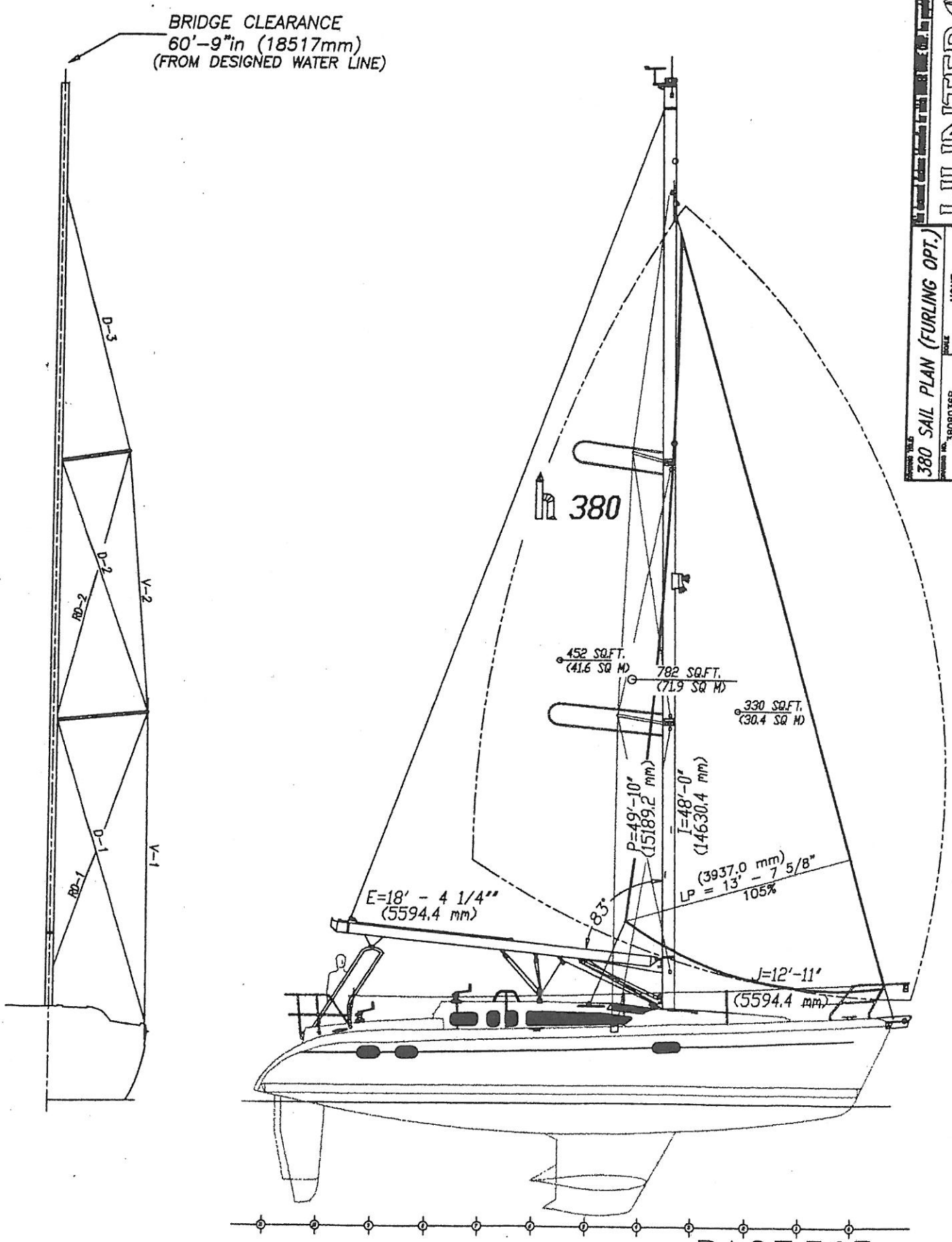
BRIDGE CLEARANCE
60'-9"in (18517mm)
(FROM DESIGNED WATER LINE)
D-3
D-2
RD-2
V-2
D-1
RD-1
V-1
380
452 SQ.FT.
(41.6 SQ M)
782 SQ.FT.
(71.9 SQ M)
330 SQ.FT.
(30.4 SQ M)
P=49'-10"
(15189.2 mm)
I=48'-0"
(14630.4 mm)
E=18' - 4 1/4"
(5594.4 mm)
83°
LP = 13' - 7 5/8"
(3937.0 mm)
105%
J=12'-11"
(5594.4 mm)
HUNTER
380 SAIL PLAN (FURLING OPT.)
3808036B
NONE
ENGINEERING DEPT
5/29/98

# MENSIONS, CAPACITIES, ETC.

## HUNTER 380

| | | |
|---|---|---|
| LENGTH OVERALL (LOA)..... | 37'3" | 11.35m |
| LENGTH OF WATERLINE (LWL)..... | 32'0 | 9.75m |
| BEAM (MAX)..... | 12'7" | 3.84m |
| DRAFT (SHOAL/DEEP)..... | 5'0 (SHOAL) 6'6" (DEEP) | 1.52m 1.98m |
| DISPLACEMENT..... | 16,172 lbs. | 7351 kg |
| BALLAST (SHOAL KEEL)..... | 5,400 lbs. | 2449 kg |
| BALLAST (DEEP KEEL)..... | 4,700 lbs. | 2131 kg |
| SAIL AREA (100% TRAINGLES)..... | 740 sq. ft. | 68.8 sq.m |
| SAIL AREA (ACTUAL W/STANDARD SAILS)..... | 811 sq. ft. | 75.4 sq.m |
| I..... | 48'0" | 14.63m |
| J ..... | 12'11" | 3.94m |
| P..... | 49'1" | 14.94m |
| E..... | 15'3" | 4.65m |
| MAST HEIGHT (FROM WATERLINE)..... | 60'1" | 18.31m |
| HEADROOM..... | 6'6" | 1.98m |
| WATER CAPACITY..... | 75 U.S. gal. | 284 liters |
| HOLDING TANK CAPACITY..... | 35 U S gal. | 132 liters |
| FUEL TANK CAPACITY..... | 30 US gal. | 113 liters |
| LPG TANK CAPACITY..... | 20 lbs. | 9.09 kg |
| BATTERY CAPACITY..... | DEALER SUPPLIED | |
| ELECTRICAL VOLTAGES..... | 12 V.D.C. | 110 A.C. |
| | SELECT OVERSEAS MODELS 220 V | |
| INBOARD ENGINES..... | 36 hp | 26.8 kw |
| OPTIONAL GENERATOR..... | | 6 kw |
| MAXIMUM LOADING..... | 10 PEOPLE | 1655 kg (INCLUDING LUGGAGE) |
| LIFTING POINTS..... | INDICATED BY "SLING" LABELS ON HULL | |

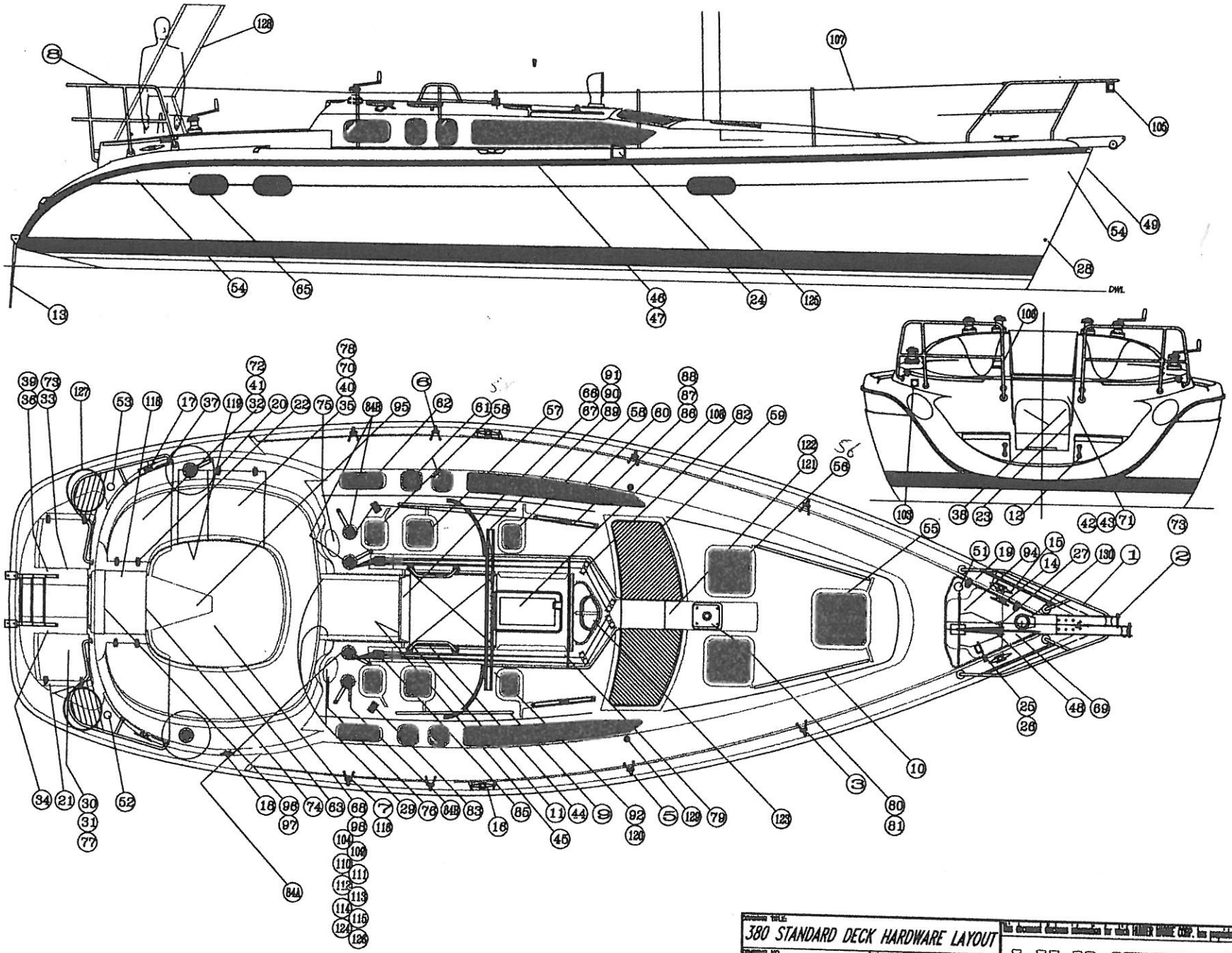


DRAWING TITLE:
380 STANDARD DECK HARDWARE LAYOUT

| | |
|---|---|
| DRAWING NO. 3808038 | REVISION NO. NONE |
| DRAWN BY ENGINEERING DEPT. | DATE 2/11/98 |

This document discloses information for which HUNTER MARINE CORP. has proprietary rights.

HUNTER

THIS PAGE UPDATED AS OF HULL #544 1-12-99

380 STANDARD DECK HARDWARE

| No. | HARDWARE | | MFG# | HUN# | QTY. |
|---|---|---|---|---|---|
| 1 | BOW RAIL | | | HW2408 | 1 |
| 2 | STEM HEAD | | | 307555 | 1 |
| 3 | FWD STANCHIONS P&S | | | 304332 | 2 |
| 5 | AFT STANCHIONS P&S | | | 305140 | 2 |
| 6 | FWD GATE STANCHIONS P&S | | | 304975 | 2 |
| 7 | AFT GATE STANCHIONS P&S | | | 304975 | 2 |
| 8 | STERN RAIL P&S | | | 306785 | 2 |
| 9 | AFT HOUSE TOP HAND RAIL 48" | | | HW2440 | 2 |
| 10 | FWD HOUSE TOP HAND RAIL | | | HW2440 | 2 |
| 11 | COMPANIONWAY GRAB RAIL | | | HW2330 | 2 |
| 12 | TRANSOM GRAB RAIL | | | HW2404 | 2 |
| 13 | SWIM LADDER | | | 308835 | 1 |
| 14 | ANCHOR LOCKER CLEAT 10" | | | 308835 | 1 |
| 15 | BOW CLEATS 10" | | | 308835 | 2 |
| 16 | MID DECK CLEATS 10" | | | 308835 | 2 |
| 17 | STERN CLEATS 10" | | | HW0977 | 2 |
| 18 | FURLING CLEATS 4" | | | HW0383 | 1 |
| 19 | ANCHOR LOCKER HINGE | | | HW4172 | 2 |
| 20 | EUROSEAT HINGE | | | HW4172 | 2 |
| 21 | SWIM SEAT HINGE | | | HW4172 | 2 |
| 22 | GULLWING SEAT HINGE | | | HW4172 | 2 EA. |
| 23 | HELMSMAN SEAT HINGE | | | 304311 | 2 EA. |
| 24 | CHAINPLATES UPPERS | | | 304533 | 2 |
| 25 | ANCHOR LOCKER HANDLE | | | HW4479 | 2 |
| 26 | STRIKER PLATES | | | HW2122 | 1 |
| 27 | ANCHOR LOCKER DRAIN | | | PL1480 | 1 |
| 28 | ANCH. LCKR. DRAIN THRU HULL | | | PL0840/50 | 1 |
| 29 | ROPE LOCKER DRAIN | | | HW4055 | 1 |
| 30 | PROPANE LOCKER DRAIN | | | PL0520 | 2 |
| 31 | PROP. LCKR. DRAIN THRU HULL | | | PL0840/50 | 1 |
| 32 | GULLWING SEAT BUMPERS | | | FM0283 | 1 |
| 33 | SWIM SEAT BUMPERS | | | FM0283 | 4 |
| 34 | HELMSMAN SEAT BUMPERS | | | FM0283 | 4 |
| 35 | EUROSEAT BUMPERS | | | FM0283 | 4 |
| 36 | SWIM SEAT LATCHES | | | HW4358 | 2 |
| 37 | GULLWING SEAT LATCHES | | | HW4358 | 2 |
| 38 | HELMSMAN SEAT LATCHES | | | HW4358 | 2 |
| 39 | SWIM SEAT STRAP ASSEMBLY | | | HW4358 | 2 |
| 40 | EURO SEAT STRAP ASSY. | | | HW2240 | 2 |
| 41 | GULLWING SEAT STRAP ASSY. | | | HW2240 | 2 |
| 42 | HELMSAN SEAT LANYARD | | | 999999 | 1 |
| 43 | HELMSMAN SEAT EYE STRAPS | | | HW4450 | 2 |
| 44 | SLIDER TRACK | | | HW0160 | 1 PR. |
| 45 | ALU. COMPANIONWAY EXTRUS. | | | HW0146 | 1 |
| 46 | RUB RAIL 85' | | | HW2460 | 1 |
| 47 | RAIL INSERT 85' | | HW2452 | HW2455 | 1 |
| 48 | ANCHOR LOCKER U BOLT | | | HW5512 | 1 |
| 49 | BOW STRAP U BOLT | | | HW5510 | 1 |
| 51 | FRESH WATER DECK FILL | | | PL1130 | 1 |
| 52 | DIESEL DECK FILL PLATE | | | PL1126 | 1 |
| 53 | WASTE DECK FILL PLATE | | | PL1140 | 1 |
| 54 | TANK VENTS | | 503-4 | PL0520 | 3 |
| 55 | FWD HATCH COASTLINE | | SIZE 60 | 300950 | 1 |
| 56 | MID VENT HATCH COASTLINE | | SIZE 40 | 300260 | 2 |
| 58 | AFT VENT HATCH COASTLINE | | SIZE ~~45~~ 03 | ~~300280~~ | 4 |
| 59 | WINDSHEILD | | | HW0056 | 1 |
| 60 | FIXED HOSE SIDE PORTS-P&S | | | PX0375/376 | 2 |
| 61 | VERT OPENING HOUSE SIDE PTS | | | HW0043 | 4 |
| 62 | HORIZ. OPENING HSE. PORTS | | 39899915 | HW0084 | 2 |
| 63 | COCKPIT OPENING PORTS | | 398129993 | HW0049 | 1 |

- 1007161

This document discloses information for which HUNTER MARINE CORP. has proprietary rights.

HUNTER

380 STANDARD DECK HARDWARE LIST

DRAWING NO. 3808039 | SCALE OR NO. NONE | DATE 2/11/98

ENGINEERING DEPT.

THIS PAGE UPDATED AS OF HULL #544 1-12-99

380 STANDARD DECK HARDWARE

| No. | HARDWARE | | MFG# | HUN# | QTY. |
|---|---|---|---|---|---|
| 1 | BOW RAIL | | | HW2408 | 1 |
| 2 | STEM HEAD | | | 307555 | 1 |
| 3 | FWD STANCHIONS P&S | | | 304332 | 2 |
| 5 | AFT STANCHIONS P&S | | | 305140 | 2 |
| 6 | FWD GATE STANCHIONS P&S | | | 304975 | 2 |
| 7 | AFT GATE STANCHIONS P&S | | | 304975 | 2 |
| 8 | STERN RAIL P&S | | | 306785 | 2 |
| 9 | AFT HOUSE TOP HAND RAIL 48" | | | HW2440 | 2 |
| 10 | FWD HOUSE TOP HAND RAIL | | | HW2440 | 2 |
| 11 | COMPANIONWAY GRAB RAIL | | | HW2330 | 2 |
| 12 | TRANSOM GRAB RAIL | | | HW2404 | 2 |
| 13 | SWIM LADDER | | | 308835 | 1 |
| 14 | ANCHOR LOCKER CLEAT 10" | | | 308835 | 1 |
| 15 | BOW CLEATS 10" | | | 308835 | 2 |
| 16 | MID DECK CLEATS 10" | | | 308835 | 2 |
| 17 | STERN CLEATS 10" | | | HW0977 | 2 |
| 18 | FURLING CLEATS 4" | | | HW0383 | 1 |
| 19 | ANCHOR LOCKER HINGE | | | HW4172 | 2 |
| 20 | EUROSEAT HINGE | | | HW4172 | 2 |
| 21 | SWIM SEAT HINGE | | | HW4172 | 2 |
| 22 | GULLWING SEAT HINGE | | | HW4172 | 2 EA. |
| 23 | HELMSMAN SEAT HINGE | | | 304311 | 2 EA. |
| 24 | CHAINPLATES UPPERS | | | 304533 | 2 |
| 25 | ANCHOR LOCKER HANDLE | | | HW4479 | 2 |
| 26 | STRIKER PLATES | | | HW2122 | 1 |
| 27 | ANCHOR LOCKER DRAIN | | | PL1480 | 1 |
| 28 | ANCH. LCKR. DRAIN THRU HULL | | | PL0840/50 | 1 |
| 29 | ROPE LOCKER DRAIN | | | HW4055 | 1 |
| 30 | PROPANE LOCKER DRAIN | | | PL0520 | 2 |
| 31 | PROP. LCKR. DRAIN THRU HULL | | | PL0840/50 | 1 |
| 32 | GULLWING SEAT BUMPERS | | | FM0283 | 1 |
| 33 | SWIM SEAT BUMPERS | | | FM0283 | 4 |
| 34 | HELMSMAN SEAT BUMPERS | | | FM0283 | 4 |
| 35 | EUROSEAT BUMPERS | | | FM0283 | 4 |
| 36 | SWIM SEAT LATCHES | | | HW4358 | 2 |
| 37 | GULLWING SEAT LATCHES | | | HW4358 | 2 |
| 38 | HELMSMAN SEAT LATCHES | | | HW4358 | 2 |
| 39 | SWIM SEAT STRAP ASSEMBLY | | | HW4358 | 2 |
| 40 | EURO SEAT STRAP ASSY. | | | HW2240 | 2 |
| 41 | GULLWING SEAT STRAP ASSY. | | | HW2240 | 2 |
| 42 | HELMSAN SEAT LANYARD | | | 999999 | 1 |
| 43 | HELMSMAN SEAT EYE STRAPS | | | HW4450 | 2 |
| 44 | SLIDER TRACK | | | HW0160 | 1 PR. |
| 45 | ALU. COMPANIONWAY EXTRUS. | | | HW0146 | 1 |
| 46 | RUB RAIL 85' | | | HW2460 | 1 |
| 47 | RAIL INSERT 85' | | HW2452 | HW2455 | 1 |
| 48 | ANCHOR LOCKER U BOLT | | | HW5512 | 1 |
| 49 | BOW STRAP U BOLT | | | HW5510 | 1 |
| 51 | FRESH WATER DECK FILL | | | PL1130 | 1 |
| 52 | DIESEL DECK FILL PLATE | | | PL1126 | 1 |
| 53 | WASTE DECK FILL PLATE | | | PL1140 | 1 |
| 54 | TANK VENTS | | 503-4 | PL0520 | 3 |
| 55 | FWD HATCH COASTLINE | | SIZE 60 | 300950 | 1 |
| 56 | MID VENT HATCH COASTLINE | | SIZE 40 | 300260 | 2 |
| 58 | AFT VENT HATCH COASTLINE | | SIZE 40 | 300260 | 4 |
| 59 | WINDSHEILD | | | HW0056 | 1 |
| 60 | FIXED HOSE SIDE PORTS-P&S | | | PX0375/376 | 2 |
| 61 | VERT OPENING HOUSE SIDE PTS | | | HW0043 | 4 |
| 62 | HORIZ. OPENING HSE. PORTS | | 39899915 | HW0084 | 2 |
| 63 | COCKPIT OPENING PORTS | | 398129993 | HW0049 | 1 |

This document discloses information for which HUNTER MARINE CORP. has proprietary rights.

HUNTER

380 STANDARD DECK HARDWARE LIST

| | | | |
|---|---|---|---|
| FILE NO. | 380B039 | SCALE NONE | |
| | ENGINEERING DEPT. | DATE 2/11/98 | |

380 STANDARD DECK HARDWARE

| No. | HARDWARE | | MFG# | HUN# | QTY. |
|---|---|---|---|---|---|
| 1 | BOW RAIL | | | HW2408 | 1 |
| 2 | STEM HEAD | | | 307555 | 1 |
| 3 | FWD STANCHIONS P&S | | | 304332 | 2 |
| 5 | AFT STANCHIONS P&S | | | 305140 | 2 |
| 6 | FWD GATE STANCHIONS P&S | | | 304975 | 2 |
| 7 | AFT GATE STANCHIONS P&S | | | 304975 | 2 |
| 8 | STERN RAIL P&S | | | 306785 | 2 |
| 9 | AFT HOUSE TOP HAND RAIL 48" | | | HW2440 | 2 |
| 10 | FWD HOUSE TOP HAND RAIL | | | HW2440 | 2 |
| 11 | COMPANIONWAY GRAB RAIL | | | HW2330 | 2 |
| 12 | TRANSOM GRAB RAIL | | | HW2404 | 2 |
| 13 | SWIM LADDER | | | 308835 | 1 |
| 14 | ANCHOR LOCKER CLEAT 10" | | | 308835 | 1 |
| 15 | BOW CLEATS 10" | | | 308835 | 2 |
| 16 | MID DECK CLEATS 10" | | | 308835 | 2 |
| 17 | STERN CLEATS 10" | | | HW0977 | 2 |
| 18 | FURLING CLEATS 4" | | | HW0383 | 1 |
| 19 | ANCHOR LOCKER HINGE | | | HW4172 | 2 |
| 20 | EUROSEAT HINGE | | | HW4172 | 2 |
| 21 | SWIM SEAT HINGE | | | HW4172 | 2 |
| 22 | GULLWING SEAT HINGE | | | HW4172 | 2 EA. |
| 23 | HELMSMAN SEAT HINGE | | | 304311 | 2 EA. |
| 24 | CHAINPLATES UPPERS | | | 304533 | 2 |
| 25 | ANCHOR LOCKER HANDLE | | | HW4479 | 2 |
| 26 | STRIKER PLATES | | | HW2122 | 1 |
| 27 | ANCHOR LOCKER DRAIN | | | PL1480 | 1 |
| 28 | ANCH. LCKR. DRAIN THRU HULL | | | PL0840/50 | 1 |
| 29 | ROPE LOCKER DRAIN | | | HW4055 | 1 |
| 30 | PROPANE LOCKER DRAIN | | | PL0520 | 2 |
| 31 | PROP. LCKR. DRAIN THRU HULL | | | PL0840/50 | 1 |
| 32 | GULLWING SEAT BUMPERS | | | FM0283 | 1 |
| 33 | SWIM SEAT BUMPERS | | | FM0283 | 4 |
| 34 | HELMSMAN SEAT BUMPERS | | | FM0283 | 4 |
| 35 | EUROSEAT BUMPERS | | | FM0283 | 4 |
| 36 | SWIM SEAT LATCHES | | | HW4358 | 2 |
| 37 | GULLWING SEAT LATCHES | | | HW4358 | 2 |
| 38 | HELMSMAN SEAT LATCHES | | | HW4358 | 2 |
| 39 | SWIM SEAT STRAP ASSEMBLY | | | HW4358 | 2 |
| 40 | EURO SEAT STRAP ASSY. | | | HW2240 | 2 |
| 41 | GULLWING SEAT STRAP ASSY. | | | HW2240 | 2 |
| 42 | HELMSAN SEAT LANYARD | | | 999999 | 1 |
| 43 | HELMSMAN SEAT EYE STRAPS | | | HW4450 | 2 |
| 44 | SLIDER TRACK | | | HW0160 | 1 PR. |
| 45 | ALU. COMPANIONWAY EXTRUS. | | | HW0146 | 1 |
| 46 | RUB RAIL 85' | | | HW2460 | 1 |
| 47 | RAIL INSERT 85' | | HW2452 | HW2455 | 1 |
| 48 | ANCHOR LOCKER U BOLT | | | HW5512 | 1 |
| 49 | BOW STRAP U BOLT | | | HW5510 | 1 |
| 51 | FRESH WATER DECK FILL | | | PL1130 | 1 |
| 52 | DIESEL DECK FILL PLATE | | | PL1126 | 1 |
| 53 | WASTE DECK FILL PLATE | | | PL1140 | 1 |
| 54 | TANK VENTS | | 503-4 | PL0520 | 3 |
| 55 | FWD HATCH LEWMAR | | 39560070 | HW0084 | 1 |
| 56 | MID VENT HATCH LEWMAR | | 39410070 | HW0014 | 2 |
| 58 | AFT VENT HATCH LEWMAR | | | HW0013 | 4 |
| 59 | WINDSHEILD | | | HW0056 | 1 |
| 60 | FIXED HOSE SIDE PORTS-P&S | | | PX0375/376 | 2 |
| 61 | VERT OPENING HOUSE SIDE PTS | | | HW0043 | 4 |
| 62 | HORIZ. OPENING HSE. PORTS | | 39899915 | HW0084 | 2 |
| 63 | COCKPIT OPENING PORTS | | 398129993 | HW0049 | 1 |

This document discloses information for which HUNTER MARINE CORP. has proprietary rights.

HUNTER

DRAWING TITLE: 380 STANDARD DECK HARDWARE

DRAWING NO.: 3808039

SCALE: NONE

DRAWN BY: ENGINEERING DEPT

DATE: 6/29/98

380 DECK HARDWARE CONT'

| No. | HARDWARE | | MFG# | HUN# | QTY. |
|---|---|---|---|---|---|
| 65 | HULL SIDE FIXED PORTS | | | PX0297 | 4 |
| 66 | PLEXI COMPANIONWAY HATCH | | | QF920001 | 1 |
| 67 | PIN BOARDS | | | QF850001 | 1 SET |
| 68 | FRP STEERING CONSOLE | | QA270100 | QA270150 | 1 |
| 69 | FRP ANCHOR LOCKER LID | | | QA270010 | 1 |
| 70 | FRP EUROSEAT | | | QA270065 | 1 |
| 71 | FRP HELMSMAN SEAT (2 PARTS) | | QA270190 | QA270192 | 1 |
| 72 | FRP GULLWING SEAT P&S | | QA270180 | QA270185 | 2 |
| 73 | FRP SWIM SEAT | | QA270195 | QA270215 | 2 |
| 74 | FRP QUAD COVER | | | QA270085 | 1 |
| 75 | FRP PORT ROPE LOCKER LINER | | | QA270051 | 1 |
| 76 | FRP STBD ROPE LOCKER LINER | | | QA270053 | 1 |
| 77 | FRP PROPANE LOCKER LINER | | | QA270295 | 1 |
| 78 | FRP EURO SEAT LINER | | | QA270068 | 1 |
| 79 | FRP SPRAY HOOD (2 PARTS) | | QA270040 | QA270042 | 1 |
| 80 | MAST STEP | | SELDEN | 401175 | 1 |
| 81 | COMPRESSION POST/DECK PLATE | | | 304924 | 1 |
| 82 | DEFLECTOR BLOCKS | | 504-30 | HW0104 | 4 |
| 83 | CHEEK BLOCKS | | 705-10 | HW0277 | 2 |
| 84A | WINCH LEWMAR (HALYARDS, MNSHTS.) | | 44CST | HW2521 | 1 |
| 84B | JB.SHT., WINCHES, JIB SHTS | | 40CST | HW2520 | 3 |
| 85 | SHEET STOPPER QUAD | | | 304030 | 2 |
| 86 | JIB TRACKS 24" X 1 1/4 X 3/16 SCHAEF. | | | HW0274 | 2 |
| 87 | JIB TRACKS STOPS SCHAEFER | | 74-36G | HW0215 | 4 |
| 88 | LEAD CARS SILVER SCHAEFER | | 32-98 | HW0217 | 2 |
| 89 | HARKEN CONTROL BLOCK PORT | | | HW0334 | 1 |
| 90 | HARKEN TRAVELER TRACK | | | HW0336 | 1 |
| 91 | HARKEN TRAVELER CAR | | | HW0332 | 1 |
| 92 | HARKEN CONTROL BLOCK STBD | | | HW0335 | 1 |
| 94 | ANCHOR US #22 | | #1209 | LGO320 | 1 |
| 95 | STEERING SHEAVES | | | HW3289G | 1 |
| 96 | STEERING QUADRANTS | | | HW3283 | 1 |
| 97 | QUAD STOPS | | | HW3131 | 2 |
| 98 | STEERING WHEEL 42" | | | HW3279 | 1 |
| 99A | LOWER MAINSHEET BLOCK | | HARKEN 1560 | HW0333 | 1 |
| 99B | MAINT & VANG BLOCK @ MAST STEP | | SCFR SC705-45 | HW0232 | 1 |
| 100 | UPPER MAINSHEET BLOCK | | HARKEN 1540 | HW0330 | 3 |
| 101 | UPPER VANG BLOCK (SCHAEFER) | | SCHAEFER 701-48 | HW0227 | 1 |
| 102A | LOWER VANG BLOCK (SCHAEFER) | | SCHAEFER 701-56N | HW0229 | 1 |
| 102B | LOWER VANG BLOCK SHACKLE | | SCHAEFER 93-61 | HW0302 | 1 |
| 103 | SHORE POWER INLET | | | LG0100 | 1 |
| 104 | ENGINE PANEL YANMAR | | | HW3400-A | 1 |
| 105 | BOW LIGHT BICOLOR | | | EL0380 | 1 |
| 106 | STERN LIGHT | | | EL0390 | 1 |
| 107 | LIFE LINES | | | RL1253 | 2 PAIR |
| 108 | SOLAR PANEL | | HW2452 | EL1180 | 1 |
| 109 | SHIFT CONTROL BOX (BERKLEY) | | | HW3572 | 1 |
| 110 | COMPASS | | FN-201 | LG0130 | 1 |
| 111 | COCKPIT SPEAKERS W/ GRILL, WHITE | | | EL0101-A | 2 |
| 112 | VHF RADIO | | APELCO 5160 | EL0119 | 1 |
| 113 | KNOT METER AUTO HELM | | | EL0088 | 1 |
| 114 | DEPTH GUAGE AUTO HELM | | | EL0086 | 1 |
| 115 | FUEL GUAGE | | | HW3406 | 1 |
| 116 | SPRING SWIVEL BLOCK | | SCHAEFER 300-35 | HW0287 | 1 |
| 118 | COCKPIT SHOWER | | | PL0189 | 1 |
| 119 | BILGE PUMP | | | PL0371 | 1 |
| 120 | HARKEN TVL TRACK END STOP | | HARKEN632 | HW0331 | 2 |
| 121 | HALYARD ROLLER | | | HW1072 | 1 |
| 122 | HALYARD ROLLER BRKT. | | | HW3888 | 1 SET |
| 123 | DORADE VENTS | | | HW4856 | 2 |
| 124 | S.S. PEDESTAL GUARD FWD. | | | HW2305 | 1 |
| 125 | WINCH-MAINSHEET- JIB HALY.- JIB SHT. | | | HW2520 | 3 |
| 126 | COCKPIT CONSOLE AFT RAIL | | | HW2121 | 1 |
| 127 | LPG LOCKER LIDS P&S | | | PC030285 | 2 |
| 128 | ARCH | | | PA270533 | 1 |
| 129 | CHAINPLATES LOWERS | | | 304311 | 2 |
| 130 | ANCHOR WINDLASS (OPTIONAL) | | | 999999 | 1 |

This document discloses information for which HUNTER MARINE CORP. has proprietary rights.

HUNTER

DRAWING TITLE: 380 STANDARD DECK HARDWARE CONT'

DRAWING NO. 3808040 | SCALE NONE | DRAWN BY ENGINEERING DEPT | DATE 6/29/98

THIS PG. UPDATED AS OF 12.9.98

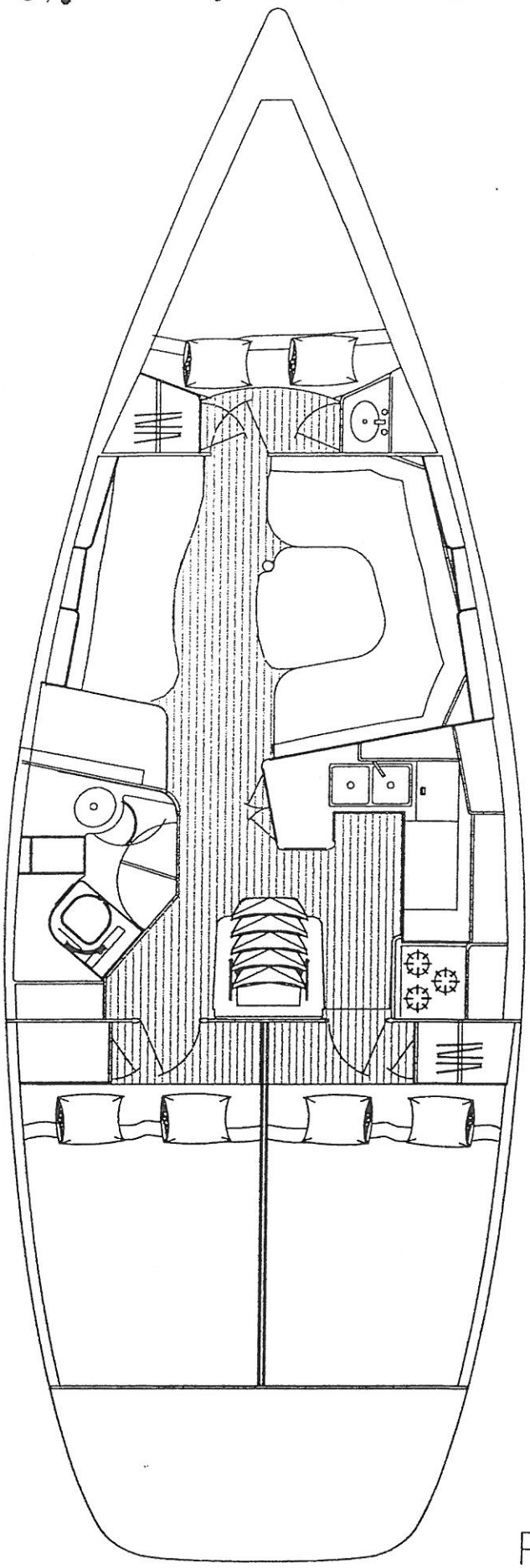

This document discloses information for which HUNTER MARINE CORP. has proprietary rights.

HUNTER

DRAWING TITLE: 380 ACCOMIDATION PLAN (TRI-CABIN)

DRAWING NO. 380B041B | REVISION NO. NONE

DRAWN BY: ENGINEERING DEPT. | DATE: 2/11/98

THIS PG. UPDATED AS OF 12-9-98

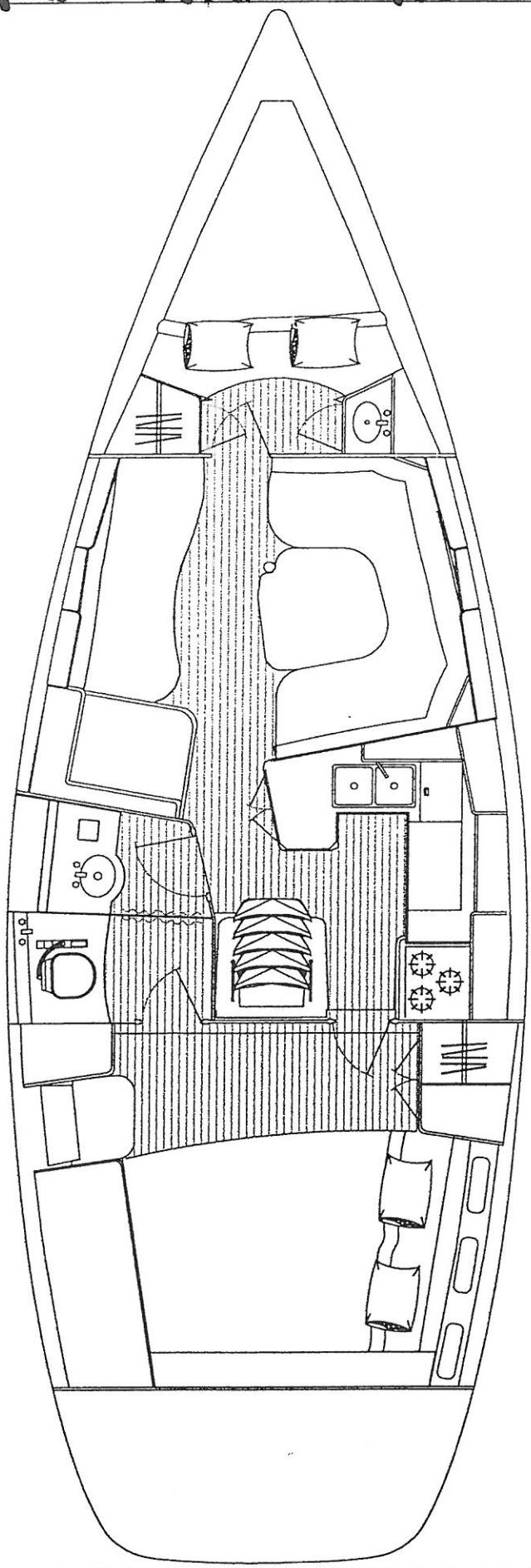

This document discloses information for which HUNTER MARINE CORP. has proprietary rights.

HUNTER

DRAWING TITLE: 380 ACCOMADATION PLAN (STD)

DRAWING NO. 3808041A | SCALE NONE

DRAWN BY ENGINEERING | DATE 2/11/98

EXAMPLE: LOWERING THE TABLE

Ⓐ LOOSEN CLAMP WITH COUNTER CLOCKWISE MOTION. CONTINUE SUPPORTING THE TABLE TOP TO AVOID DROPPING IT TOO RAPIDLY.

Ⓑ ADJUST TABLE SLOWLY UNTIL IT REACHES DESIRED POSITION

Ⓒ RE-TIGHTEN CLAMP WITH CLOCKWISE MOTION

* TO RAISE THE TABLE: REPEAT STEPS A-C.

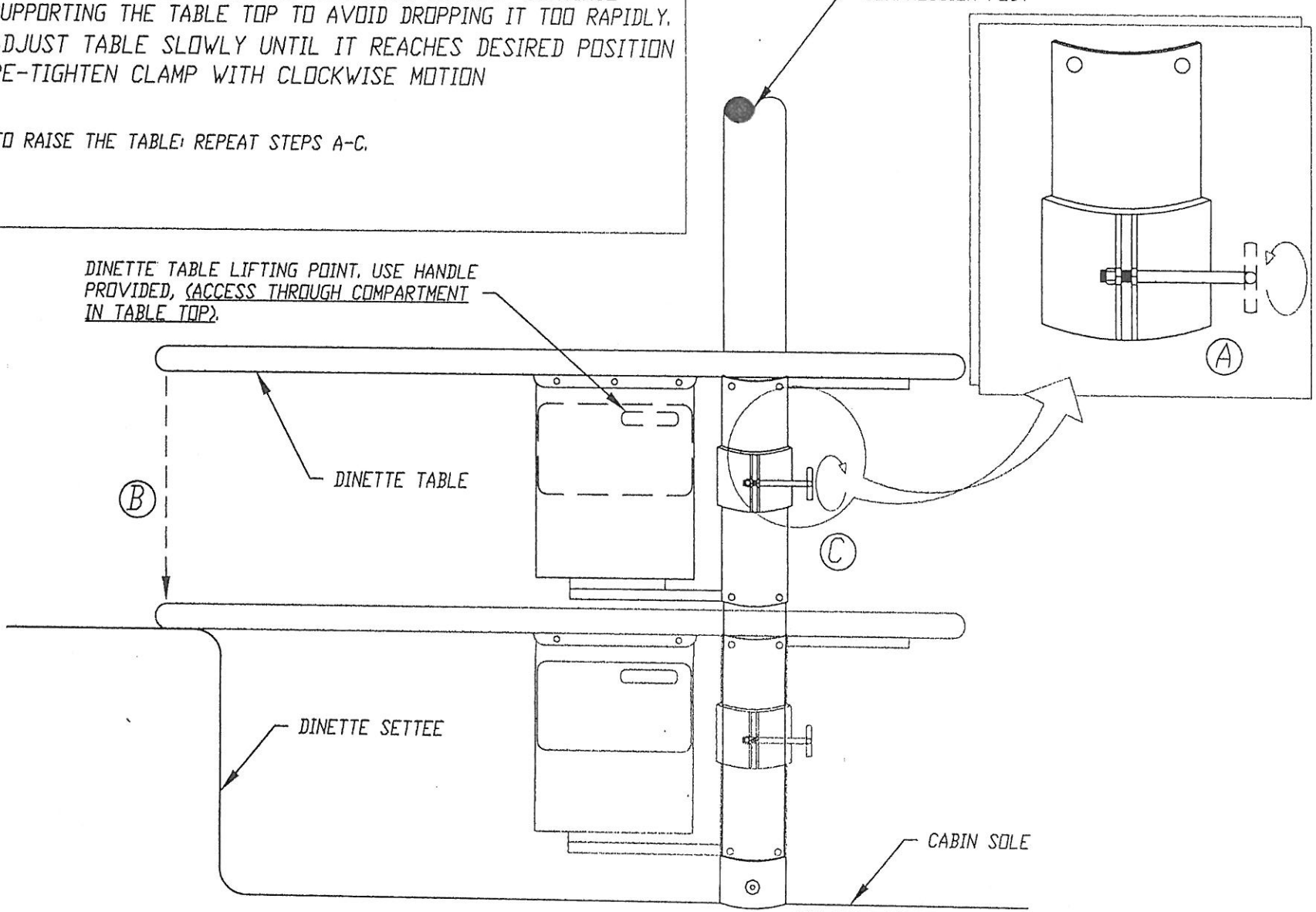


| | |
|---|---|
| DRAWING TITLE: H380 DINETTE TABLE OPERATION | This document discloses information for which HUNTER MARINE CORP. has proprietary rights. |
| DRAWING NO. 3808041C | REVISION NO. NONE |
| DRAWN BY ENGINEERING DEPT. | DATE 10/27/98 |

HUNTER

THIS PG. UPDATED AS OF 12.1.98

Ⓐ PULL SAFETY PIN OUT AND ROTATE 1/4 TURN
Ⓑ LOOSEN CLAMP WITH COUNTER CLOCKWISE MOTION
Ⓒ ADJUST TABLE SLOWLY UNTIL IT REACHES DESIRED POSITION
Ⓓ RE-TIGHTEN CLAMP WITH CLOCKWISE MOTION

* NOTE:
TO RETURN TABLE TO ORIGINAL POSITION REVERSE PROCEDURE. DO NOT FORGET TO ENGAGE THE SAFETY PIN AFTER RAISING.

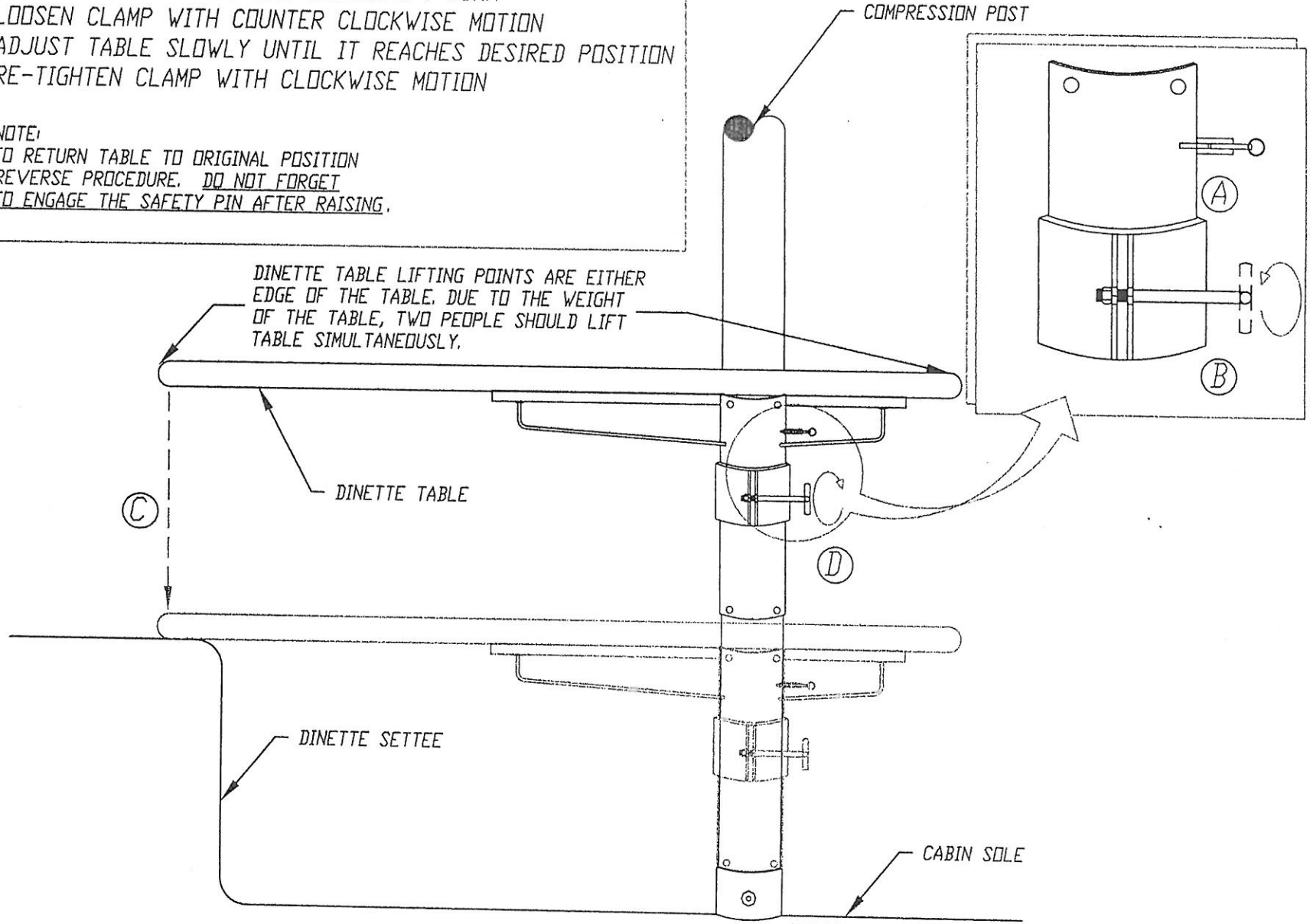


DRAWING TITLE: P450 DINETTE TABLE OPERATION
DRAWING NO. 4508041D
REVISION NO. NONE
DRAWN BY ENGINEERING DEPT
DATE 10/27/98

This document discloses information for which HUNTER MARINE CORP. has proprietary rights.

HUNTER

THIS PAGE UPDATED AS OF 10.28.98

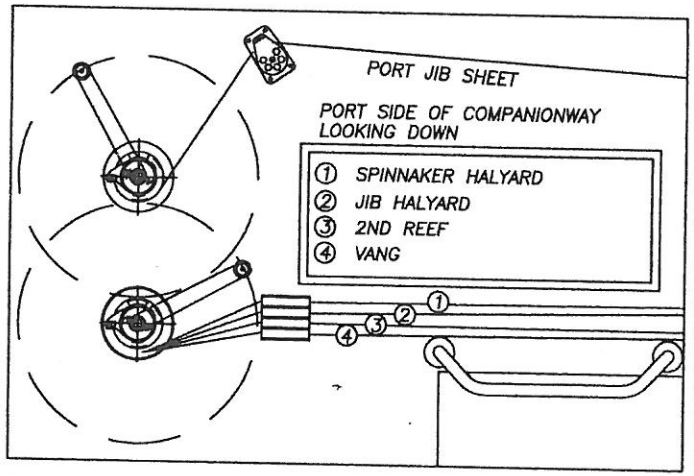


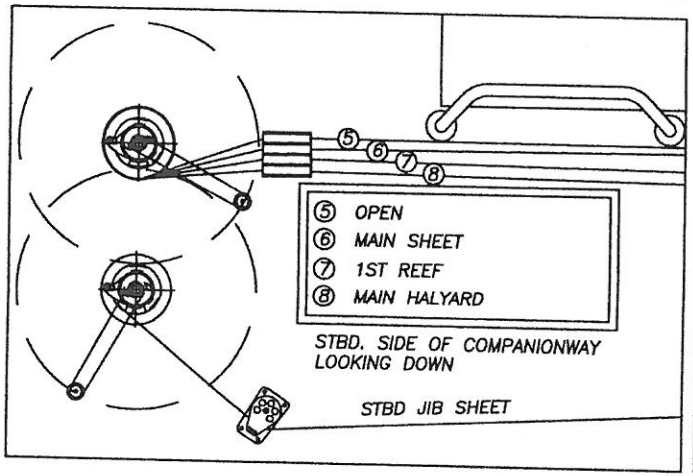


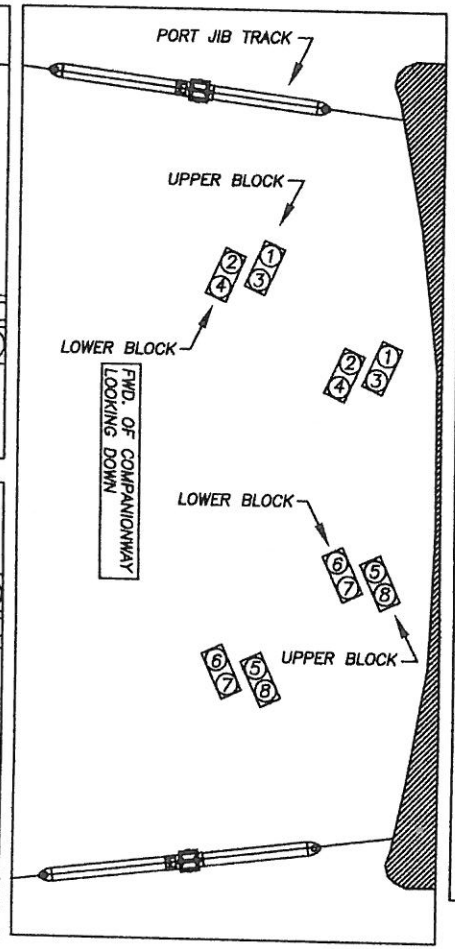


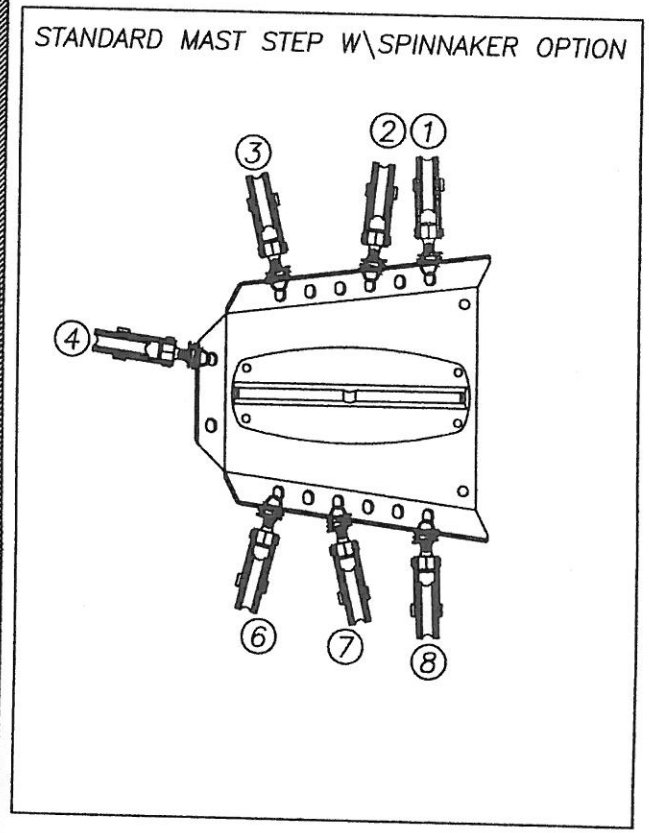


NOTE:

BLOCK NUMBERS 3,4,7 ... RUTGERSON SERIES 500 W/ SPRINGS

BLOCK NUMBERS 1,2,6,8 ... RUTGERSON SERIES 600 W/ SPRINGS

380 STD. RUN. RIG & MAST STEP DETAIL

3808042A-1 | NONE

ENGINEERING DEPT.

HUNTER

PAGE 42A-1

595-063-E
98 01 16

# FURLIN'

MAIN FURLING & REEFING SYSTEM

SELDÉN

# Manual

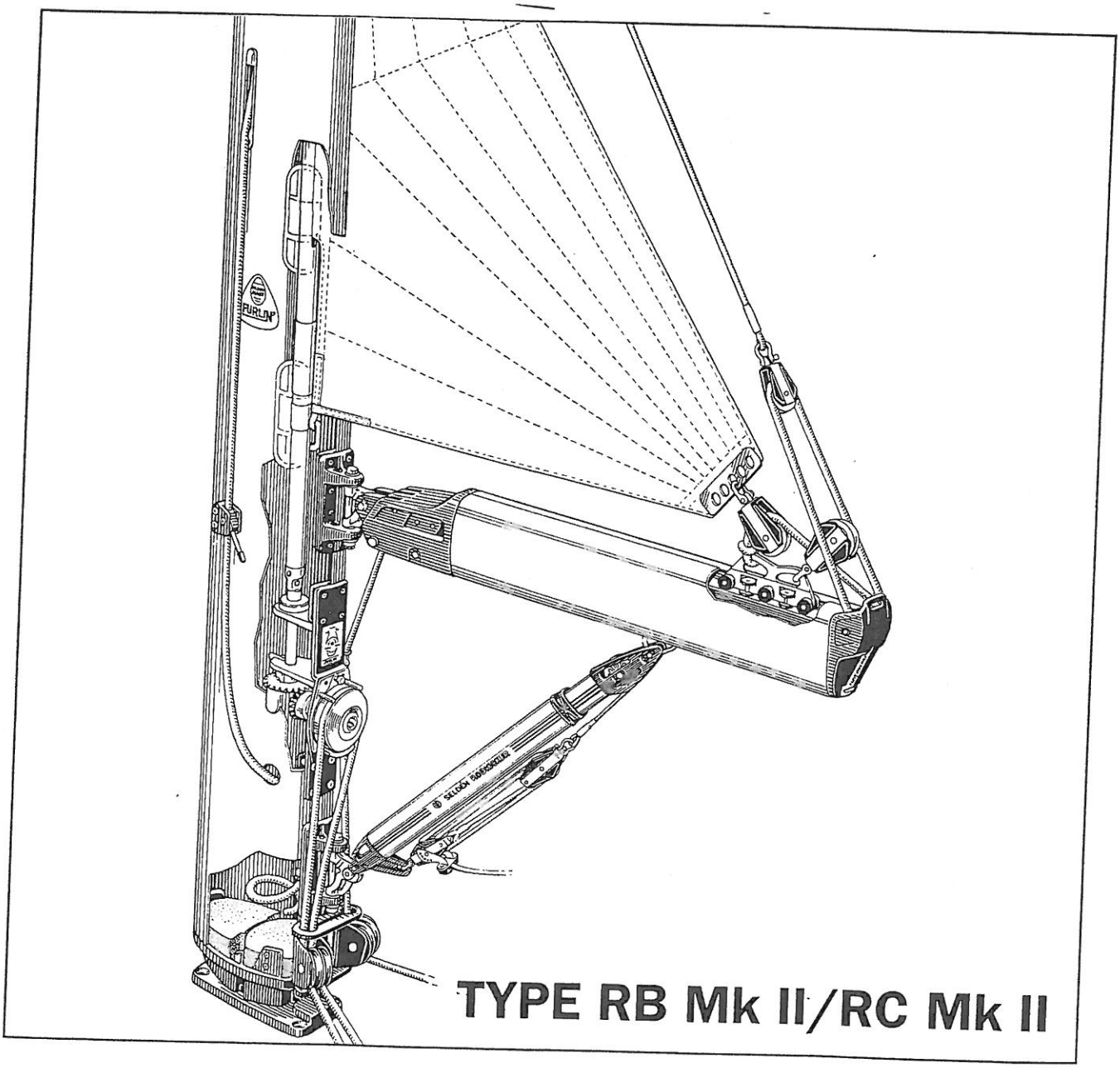


## TYPE RB Mk II/RC Mk II


| Contents: | Page: | Contents: | Page: |
|---|---|---|---|
| Product Description | 2 | The Sail | 10 |
| Checks and Adjustments Before Stepping | 4 | Spare Mainsail | 10 |
| Operation & Operational Hints | 6 | Running Cables | 11 |
| Fitting and Hoisting the Sail | 8 | Maintenance | 12 |
| Before Sailing | 9 | Dismantling | 13/14 |

- ☐ *FURLIN' is a mainsail reefing and furling system.*
- ☐ *FURLIN' has been developed from experience gained from FURLEX foresail roller-reefing, and is dimensioned for the toughest conditions.*
- ☐ *The unique design of the halyard swivel bearing distributes the load over the whole ball-race to give smoother furling and the lowest possible friction, even under high loads.*
- ☐ *The entire reefing mechanism can be easily removed from the mast for service. Stainless steel thread inserts are used for all screws, so that dismantling is easy even after many years usage in a corrosive enviroment.*
- ☐ *The mast extrusion has an additional luff groove for a storm trysail or spare main. In an emergency even a foresail with rope luff could be hoisted.*
- ☐ *This Instruction Manual has been compiled to give you information on the FURLIN' in-mast reefing system. Study it and follow the instructions carefully, and we guarantee you many years of pleasurable use from your FURLIN'.*
- ☐ *Follow the relevant rigging instructions in our booklet "HINTS AND ADVICE" for tuning the rig.*

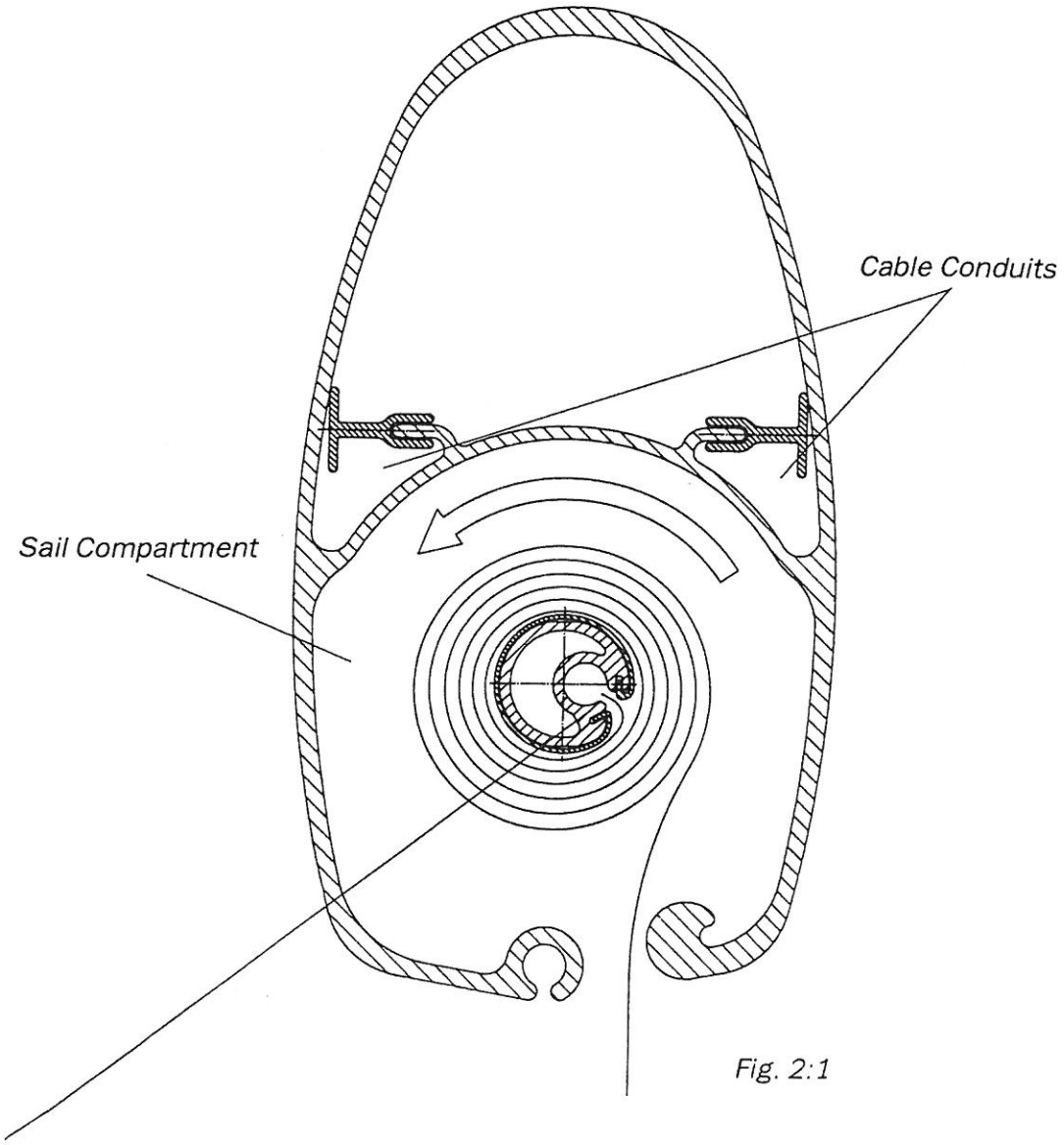


*Fig. 2:1*

*Asymmetric luff extrusion giving reduced initial resistance to reefing due to easier bending of the luff.*

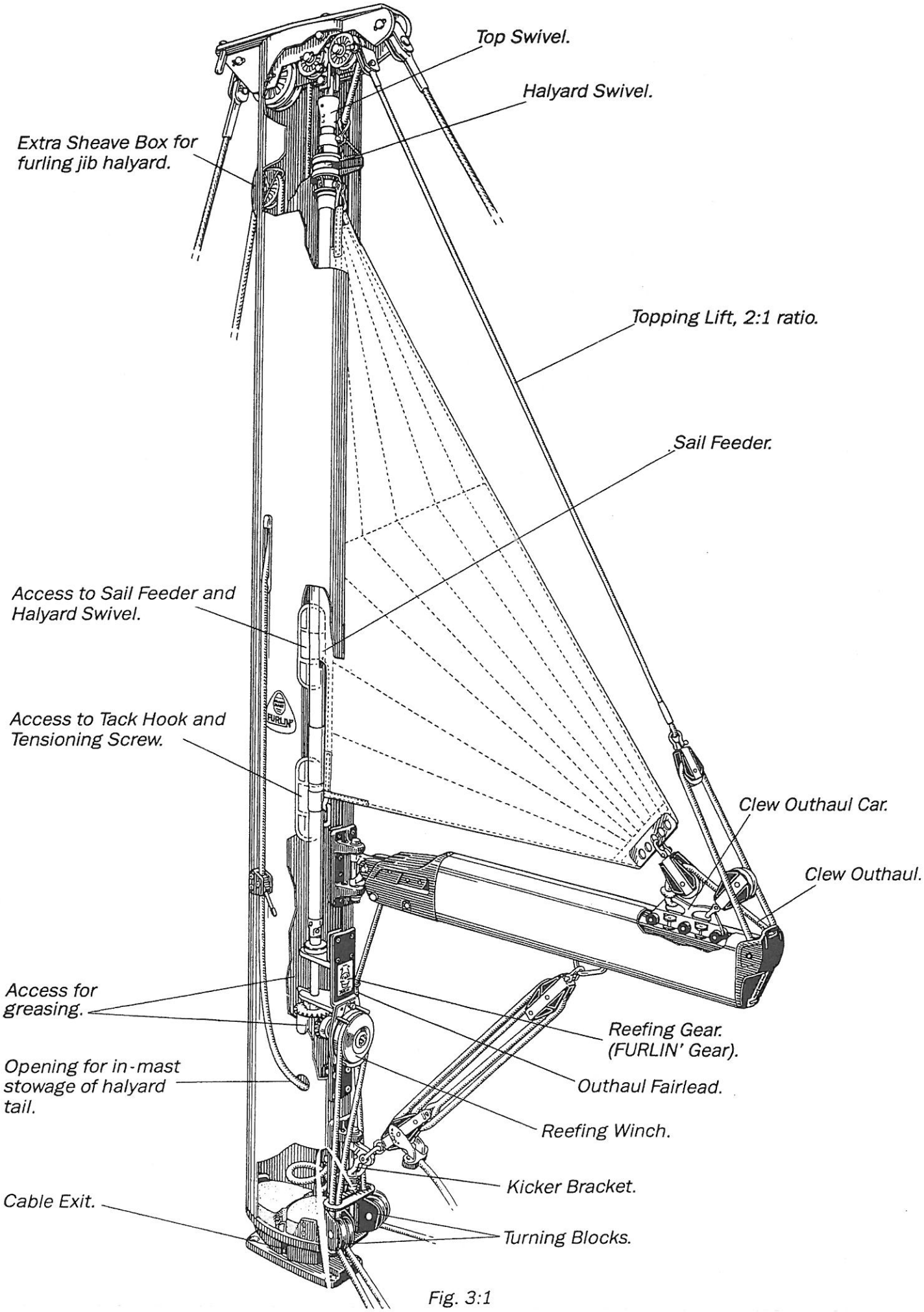
Top Swivel.
Halyard Swivel.
Extra Sheave Box for furling jib halyard.
Topping Lift, 2:1 ratio.
Sail Feeder.
Access to Sail Feeder and Halyard Swivel.
Access to Tack Hook and Tensioning Screw.
Clew Outhaul Car.
Clew Outhaul.
Access for greasing.
Reefing Gear. (FURLIN' Gear).
Opening for in-mast stowage of halyard tail.
Outhaul Fairlead.
Reefing Winch.
Kicker Bracket.
Cable Exit.
Turning Blocks.

Fig. 3:1

*The luff extrusion is correctly tensioned before leaving the factory, but tension can be re-checked before stepping the mast in the following manner.*

*Lay the mast horizontally, and check that the extrusion is just clear of the mast wall at its mid point. If adjustment is neccesary see points 1-5 below.*

*If adjustment has to be made after the mast has been stepped, then the luff extrusion should be so ·nsioned that it does not beat against the mast wall when you grasp it through the upper access hole ıd shake it.*

*Most of the extrusion will be resting on the aft face of the sail compartment when sailing.*

*DO NOT OVER-TENSION! A luff extrusion that is over-tensioned will require increased furling effort.*

## *LUFF EXTRUSION ADJUSTMENT.*

1 *Remove the Access Covers.*

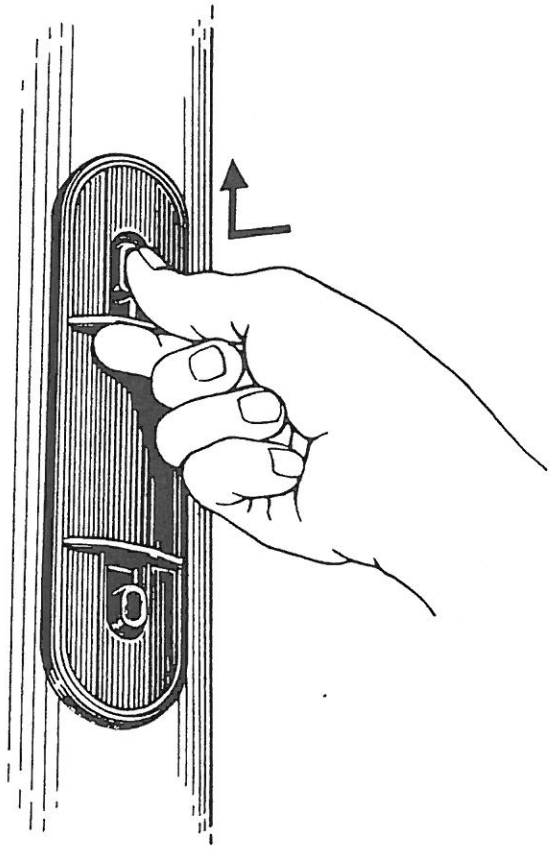

*Depress one button and push.*

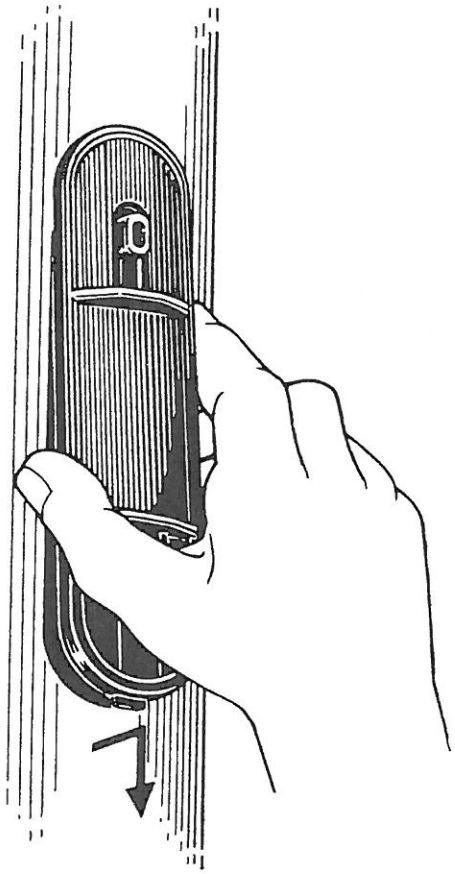

*Lift the opposite end and remove.*

2

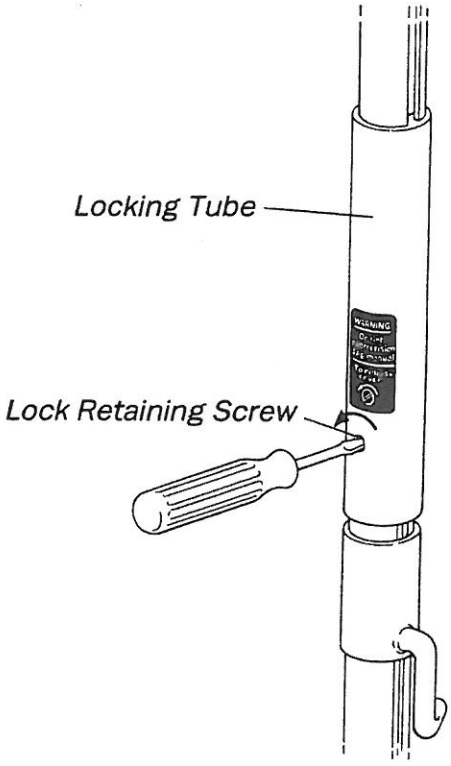


*Undo the Lock Retaining Screw and free the Locking Tube.*

3

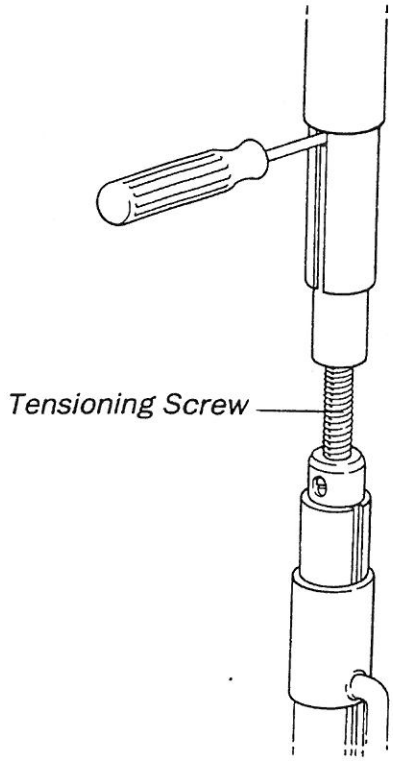


*Push the Locking Tube upwards above the Sail Feeder. Lock the Tube in this position by putting a screwdriver through the hole at the lower end of the Sail Feeder.*
*The screwdriver will also stop the luff Section from turning while tensioning (step 4).*

4

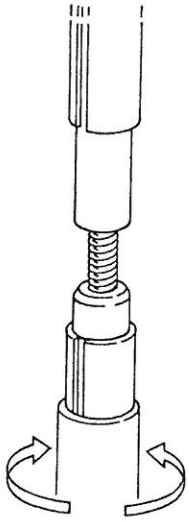

*Turn the Reefing winch using the winch handle until the luff is correctly tensioned.*

5

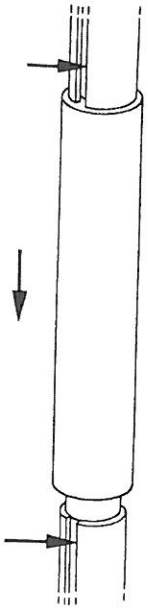

*Adjust so that the Locking Tube fits over the lower part of the Luff Section. Lower the Locking Tube to locking position. Replace the Lock Retaining Screw.*

*Reefing and unreefing is accomplished with a reefing line and an outhaul operated either from the cockpit or by working at the mast. In the latter case the outhaul is also taken to the boom or mast near the gooseneck. (See Fig. 7:1).*
*Operating at the mast is recommended with FURLIN' RC. This is due to the friction in the control lines system from mast to cockpit on a large yacht.*

***Endless line.***

*If FURLIN' is to be operated from the cockpit then a reefing line in the form of an endless loop in combination with a self-tailing winch is recommended. The endless loop must have surplus length to allow it to be easily removed from the winch. The tail-end of the loop must also be belayed on a cleat or Clam-cleat.*

*A rope-stopper can also be used, but it should be of a type that can be dismantled so that a pre-spliced loop can be fed into it. The line would otherwise first have to be passed through the stopper before splicing.*

***Clew Outhaul line.***

*A self-tailing winch is also recommended for the clew outhaul line. A rope-stopper that permits controlled paying out, such as a Rutgerson RAM-JAM, is recommended for this purpose.*

***Topping lift & kicking strap.***

*We recommend that the topping lift and kicking strap also be handled from the cockpit. These lines are best belayed with rope-stoppers. The topping lift should be ended with a figure-of-eight stopper knot to prevent it inadvertantly running out. This stopper-knot should be placed where the rope exits from the boom, and in such a position that it will prevent the boom from dropping below its lowest necessary level. (NOTE. This is not necessary if a rod type kicking strap is used).*

*Figs. 6:1 och 6:2 show two suggested arrangements.*

***Layout 1.***

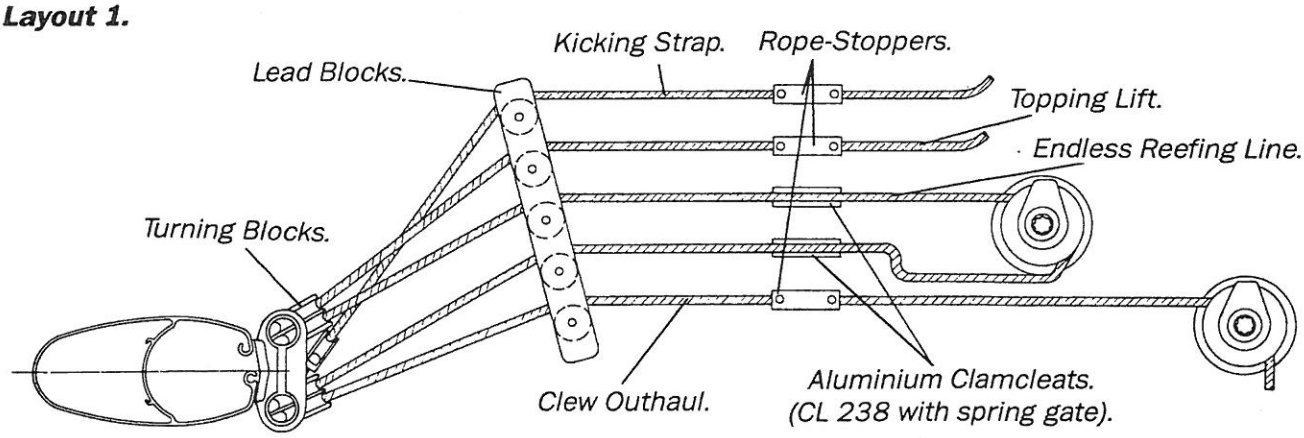


*One winch only is possible, but is then more cumbersome to operate.* *Fig. 6:1*

***Layout 2.***

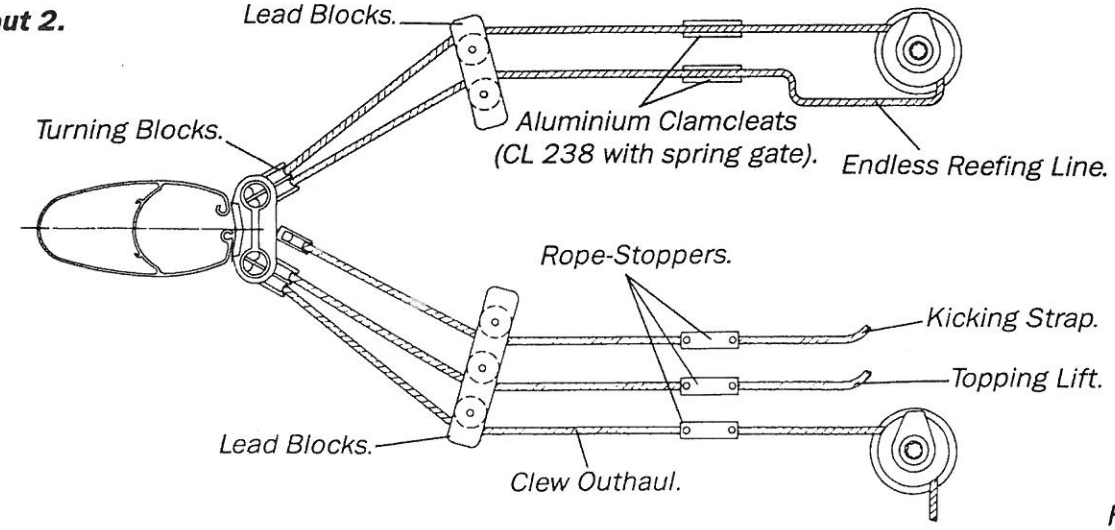


*Fig. 6:2*

*NOTE! Because the endless line is led through the same turning block in both directions excess friction can be built up through the line chafing against the kicking strap mast attachment point.*

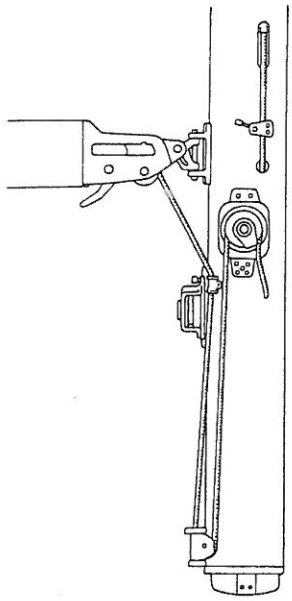

Alternative Clew Outhaul Arrangement. Fig. 7:1

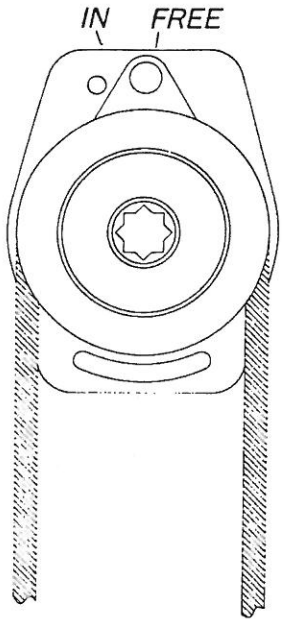


Fig. 7:2

- ☐ When reefing from the cockpit the Reefing Winch must be set to "FREE". (See Fig. 7:2).
- ☐ Use 10 mm diameter double plaited line for the endless loop.
- ☐ The mast Turning Block has removable sheaves and a slot to allow the endless loop to be fitted even when pre-spliced.
  NOTE. THIS TYPE OF TURNING BLOCK IS DESIGNED FOR REEFING SYSTEM CONTROL LINES EXCLUSIVELY!
- ☐ If deck lead blocks are used we recommend those with removable sheaves from SELDÉN MAST. (Part No. 538-809-01, three sheaves; or 538-810-01, 4 sheaves). A pre-spliced endless loop can be threaded through them.
- ☐ If fittings from other suppliers are used they should have similar features to the foregoing. Fittings with permanent sheaves will entail splicing in situ.

## OPERATING HINTS.

### Unfurling.

1. Free both sides of the endless loop from the winch and Clam-Cleat. It will then slide on the Reefing Winch.
2. Pull out the sail with the outhaul line.

### Furling.

1. The leech should be kept fairly tight when reefing or furling. Adjust the topping lift to achieve this, and the sail will form a good tight roll around the luff extrusion.
2. Use the winch to take up on the endless loop.
3. Keep slight tension on the outhaul while doing this. This applies especially when the wind is abaft the beam or in light air.
4. Always lock the Reefing Winch when leaving the boat.

### Reefing.

1. Carefully slacken off the outhaul line.
2. Whilst continuing to ease off the outhaul, roll in the desired amount of sail. The leech should be kept fairly taught. Keep slight tension on the outhaul while doing this.
   When working at the mast: activate the lock on the Reefing Winch ("IN") before reefing the sail.
3. When the desired amount of sail is rolled in, use the outhaul to stretch the foot of the sail.
   When operating from the cockpit: make both "sides" of the reefing line fast to prevent slip on the Reefing Winch. Finally, tension the outhaul.

WARNING! Never leave the handle in the Reefing Winch!
It will rotate very rapidly when the sail is unfurled.

## FITTING AND HOISTING SAIL.

1 *Check that the Tack and Head of the sail are made as illustrated on Page 10. An incorrectly made tack can cause wrinkles in the sail and make smooth furling difficult.*

2 *Remove the covers.*

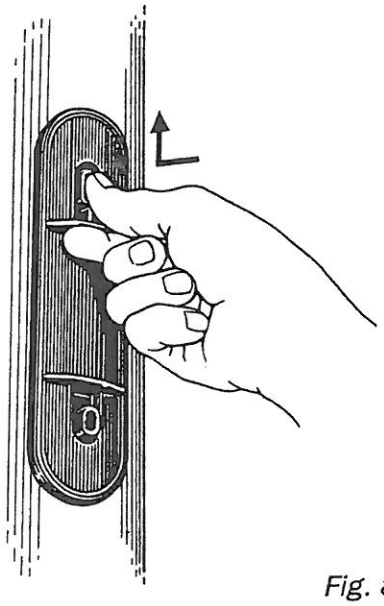

*Fig. 8:1*

*Depress one button and push.*

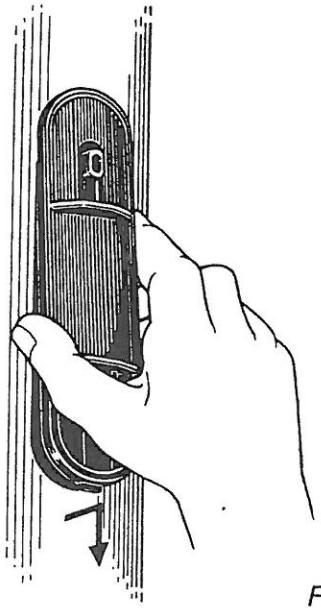

*Fig. 8:2*

*Lift the opposite end and remove.*

3 *Join the Head to the halyard swivel.*

4 *Join the Tack to the tack hook.*

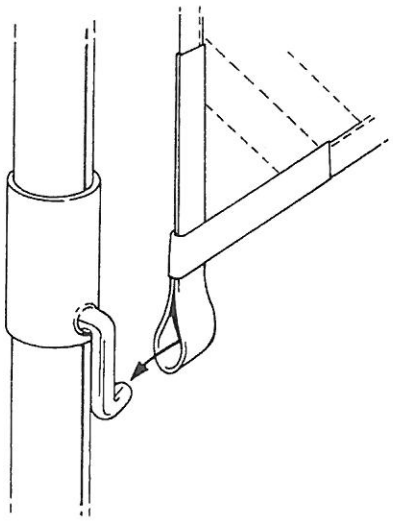

*Fig. 8:3*

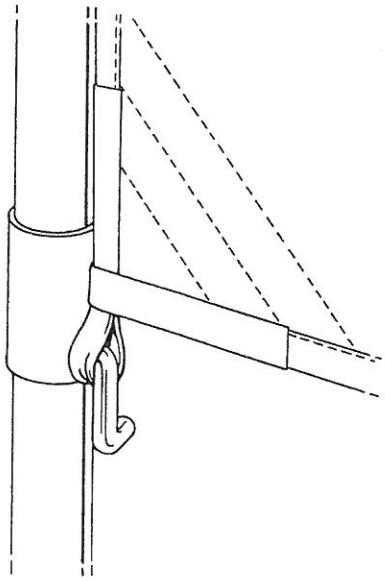

*Fig. 8:4*

5 *Attach the clew to the Outhaul Car.*

6 *Hoist the mainsail whilst simultaneously ensuring that it is feeding correctly into the luff extrusion.*

7 *Set the halyard and cleat it with the rope stopper. The halyard tail can be stowed in the mast by feeding it through the hole just below the halyard winch.*

8 *Furl the sail until only the clew is exposed. The luff extrusion is asymmetrical to facilitate rolling in one direction, and the sail should always be rolled onto the starboard side of the luff extrusion. The Reefing Winch should be turned clockwise. See Fig. 9:1.*

*NOTE. TURN THE REEFING WINCH CLOCKWISE FOR CORRECT FURLING.*

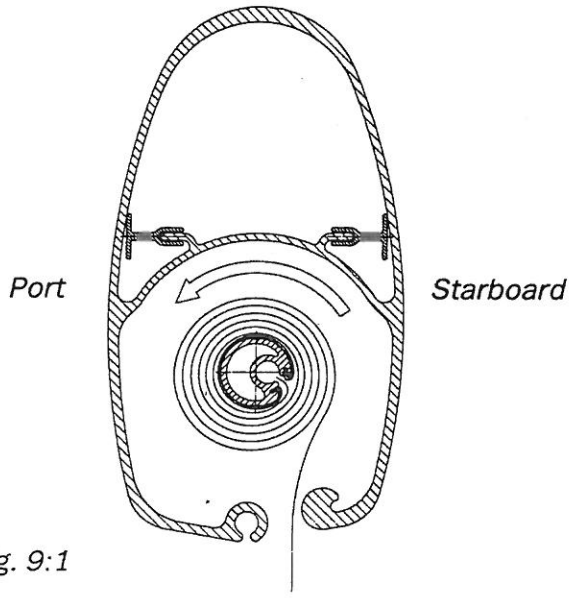


*Fig. 9:1*

## *BEFORE SAILING.*

1 *Check that the sail is correctly furled on the STARBOARD SIDE of the luff extrusion. (See Fig. 9:1).*

2 *Furl and unfurl the sail a couple of times to ensure that the system works as it should, and to familiarise yourself with its operation, and also to check that the sail is to correct size.*

3 *The area aft of the mast must be free from halyards etc. or these can be caught by the sail during the furling procedure.*

## *ANTI-VIBRATION STRIP.*

*Vibration can occur in any aluminium mast of normal design. With wind coming from approximately abeam at speeds of 4–12 knots the mast oscillates longitudinally at a rate of 3–6 cycles per second. As an optional item an "anti-vibration strip" is available for hoisting in the integral sail groove at the aft face of the mast to prevent vibration starting. It will also reduce wind noise.*

*For further information, contact Seldén Mast AB.*

## THE SAIL.

The luff extrusion is asymmetrically shaped to help overcome initial resistance when starting to furl. To improve sail shape when reefed and to reduce draft, "Luff Foam" may be used along the luff. The foam should not be placed closer than 50 mm (2") from the front edge of the luff as it will then increase initial reefing resistance. To further reduce resistance use as light cloth as possible in the luff tape.

## SAIL DIMENSIONS.

- ☐ We recommend maximum 8 mm (5/16") diameter luff-rope/luff-tape (maximum 7 mm (9/32") hard line). Luff groove dimensions are shown in fig. 10:2.
- ☐ Head and tack tapes should be of soft quality which can fold easily. Do not use metal eyelets on them.
- ☐ The clew cringle must not be thicker than 14 mm (35/64") in order to fit the outhaul block.
  As an alternative a so called "clew board" can be fitted.
  This will considerably reduce the distance between the sail and the boom.

| Extrusion | A | B | T Boom Toggle size* 80 mm | 120 mm |
|---|---|---|---|---|
| R 232/126 | 600 | 400 | 80 | 125 |
| R 260/136 | 600 | 400 | 80 | 125 |
| R 290/150 | 700 | 500 | 90 | 135 |

*Boom Brackets No. 508-151 and 508-153

| Boom Extrusion | OS |
|---|---|
| 128/90 | 250 |
| 150/105 | 250 |
| 162/125 | 250 |
| 189/132 | 350 |
| 206/139 | 350 |
| 143/76 | 150 |
| 171/94 | 150 |
| 200/117 | 200 |
| 250/140 | 200 |

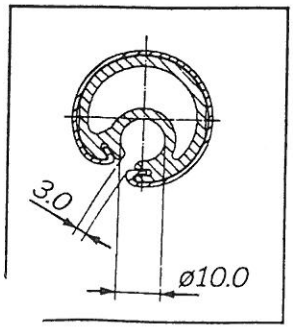


Fig. 10:2

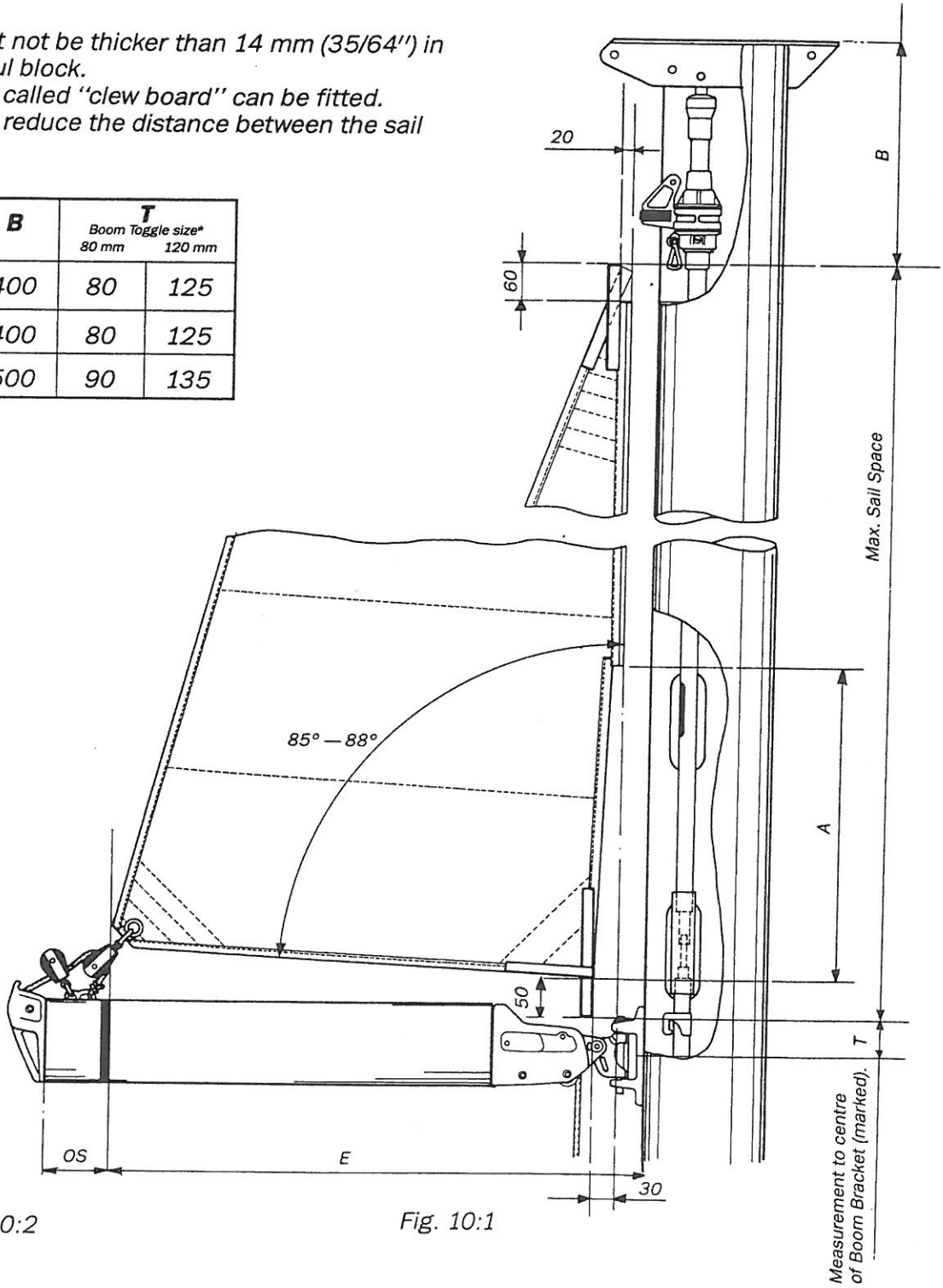


Fig. 10:1

## SPARE MAINSAIL.

The spare Mainsail, which should be carried on board every yacht, can be hoisted in the intergrated sail groove at the aft face of the mast.
We recommend Aquabatten A032 or Rutgerson 101 sail-slides for this sail.
A foresail made for a luff extrusion, for a FURLEX for example, can be used in an emergency.

## RUNNING CABLES.

*All FURLIN' mast extrusions have one or more cable conduits. These run uninterrupted to the mast heel even on keel stepped masts.*

*A messenger is threaded through all empty conduits at the factory to facilitate cable drawing.*

*A new messenger should be drawn through a conduit at the same time as a cable is drawn through. This will facilitate the running of additional cables..*

*If an existing cable should prevent a new one being run, it should be extracted after first having attached a new messenger to it to take its place in the conduit. That messenger can then be used to pull two or more cables through the conduit simultaneously.*

*Cables are led into a conduit at the masthead through a hole in the side of the mast extrusion. Cables should be over-length. The head box can then later be removed without the need to disconnect electric installations.*

*Cable exits are located in the mast heel casting.*

***Extrusion:***
*232/126*
*260/136*
*290/150*

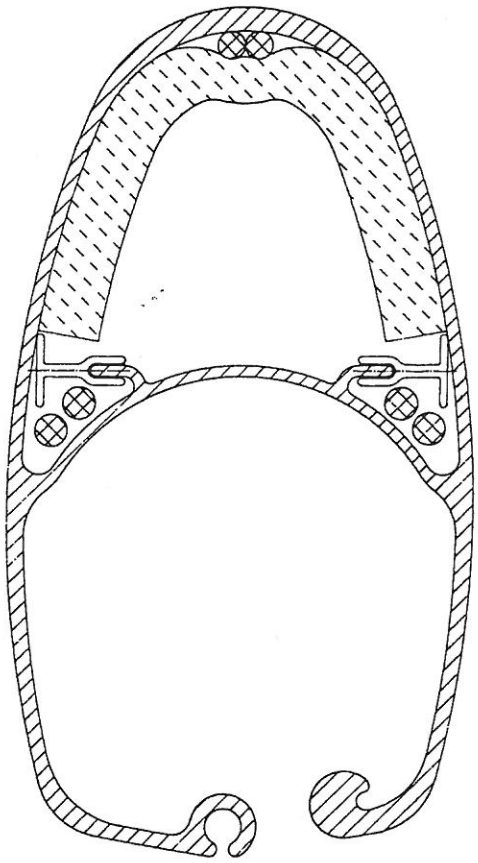

*Fig. 11:1*

*Cables for forward-facing electrical installations are held in place with an "ETHAFOAM" pad to eliminate slapping.*
*If additional cables from mid-mast installations are required, proceed as follows.*

1. *Lay the mast with forward face uppermost so that the cables will rest in one corner of the conduit.*
2. *Drill the exit hole for the cable through the other corner and forward of the cable. Use great caution when drilling so as not to damage the cable.*
3. *Carefully burr the hole to eliminate any sharp edges that could cause chafe. Some tape around the cable will give added protection.*

## *MAINTENANCE OF THE FURLIN'.*

### *Periodic Maintenance.*

*Maintenance should be undertaken at least once a year. All bearings should be greased with FURLIN' GREASE (Part No. 312-501), a tube of which is delivered with the mast. Read the following instructions and Fig. 13:1.*
*When greasing bearings and gears, do not over-grease. A thin coating of evenly applied grease is sufficient.*

*TOP SWIVEL:*

*The bearing has a lubrication hole ① marked "GREASE" where the grease should be injected. Access through the sail slot.*

*HALYARD SWIVEL:*

*Lubricate the swivel by injecting grease into the gaps ② & ③ in the ring. This is best done through the upper access hole.*

*FURLIN' GEAR:*

*Remove the upper, oval plastic plug ④.*
*Lift the rubber boot and grease the upper shaft bearing ⑤.*
*Remove the lower oval plastic plug ⑪ on a level with the Reefing winch.*
*Grease the bevel gears ⑥ and ball-bearings ⑦ & ⑧.*
*All grease points are shown in Fig. 13:1*

### *Complete Service.*

*It is a good idea after some years use to dismantle the gear for thorough cleaning and re-greasing. The FURLIN' is built so that servicing will be easy even after protracted use. Stainless steel thread inserts for all screw fastenings ensure that corrosion is eliminated.*

## *REMOVAL OF THE FURLIN' GEAR FROM THE MAST.*

1. *Lay the mast horizontally on trestles.*
2. *Relieve tension on the Luff Extrusion by slackening the Tensioning Screw. (The Tensioning Screw is described on page 4).*
3. *Remove the upper plastic plug ④. Detach the Luff Extrusion from the FURLIN' Gear through the Grease Hole. The lower split pin and clevis pin ⑨ are removed.*
4. *Remove the FURLIN' Gear from the mast by undoing the eight holding screws and taking it away from the mast. (The FURLIN' Gear can be removed even when the mast is stepped).*
5. *Remove the headbox by undoing the nuts on top ⑩. The box can then be lifted off. Detach the Top Swivel from the head box.*
6. *The luff section and the Halyard Swivel can now be pulled out of the mast.*

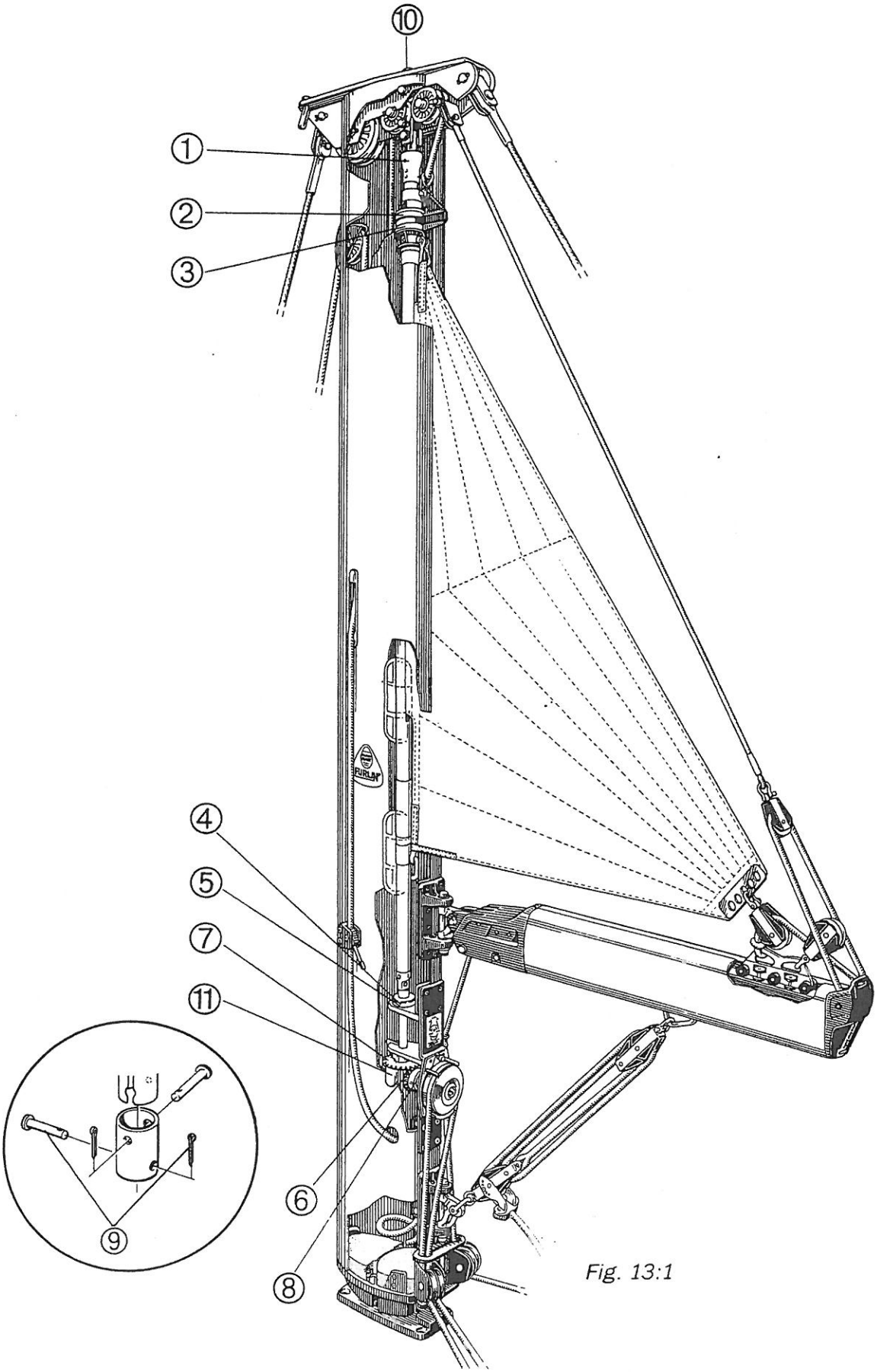


*Fig. 13:1*

## DISMANTLING UNITS WITH BALL BEARINGS.

*All dismantling should be undertaken on a clean unbroken surface. The various ball bearing units contain many small parts that fall apart when dismantling. Lay the dismantled components out in an orderly manner.*

**Dismantling the FURLIN' Gear:**

*Tools required:*

- *Hammer*
- *Punch (6-8 mm) (1/4-5/16")*
- *Allen key, 6 mm*
- *Screwdriver, small*

1. *Drive out the spring-pin ① from the large bevel gear. Use the hammer and punch.*
2. *Draw the shaft ② up and out of the FURLIN' Gear.*
   *Take care of the balls and races, which will fall apart.*
3. *Drive out the spring-pin ③ from the small bevel gear. Draw the gear and ball bearings off the shaft.*
   *Take care of ball bearings and races, which will fall apart.*
4. *Undo the four screws holding the Reefing Winch, and remove the winch from the holding bracket.*
   *Remove loose components from the reverse side of the winch, and remove the locking ring from the shaft. The winch can then be dismantled.*
5. *Clean ball bearings, their races, gears, and winch components in a solvent bath.*
6. *Reassemble the components in the reverse order. The winch must be greased before reassembly. A layer of grease in the cupped half of a ball-race will hold the balls in place during assembly. Grease the bevel gear teeth.*

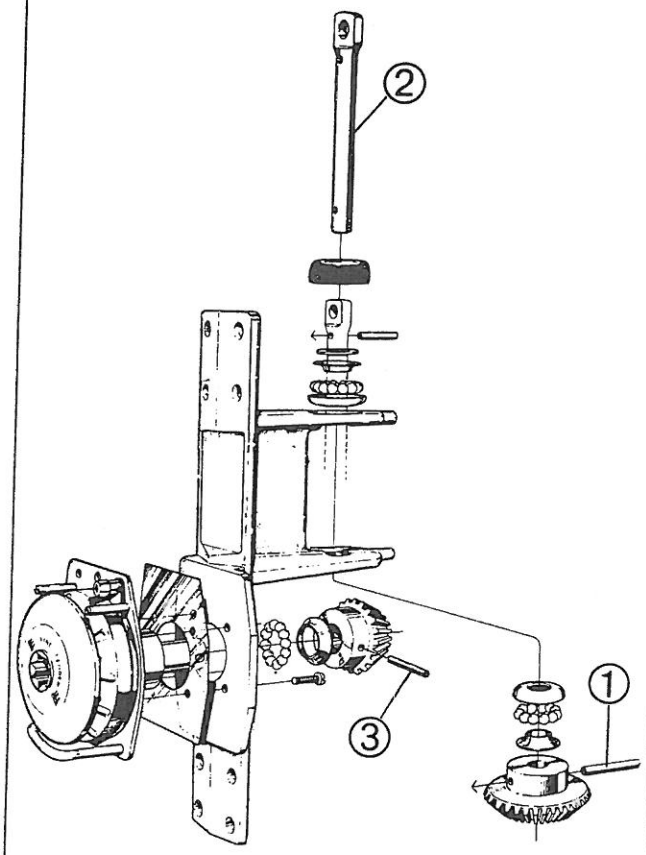


*Fig. 14:1*

**Dismantling the halyard Swivel:**

*Tools required:*
*— Phillips screw-driver*

| 1 | RB/540-107 | *Remove both screws ①* |
|---|---|---|

| 1 | RC/540-209 | *Remove both screws ① and the four screws in the stainless steel ring.* |
|---|---|---|

2 *Turn item ② 90° to free the bayonet fitting, and remove it.*

3 *Lift item ③ off together with one ball bearing. then lift off the second ball bearing.*

> *NOTE.*
> *Ball bearings may fall apart. Take care not to lose any parts.*

4 *Clean ball bearings and their races in a solvent bath.*

5 *reassemble the components in the reverse order.*
*A layer of grease in the cupped half of a ball-race will hold the balls in place during assembly.*

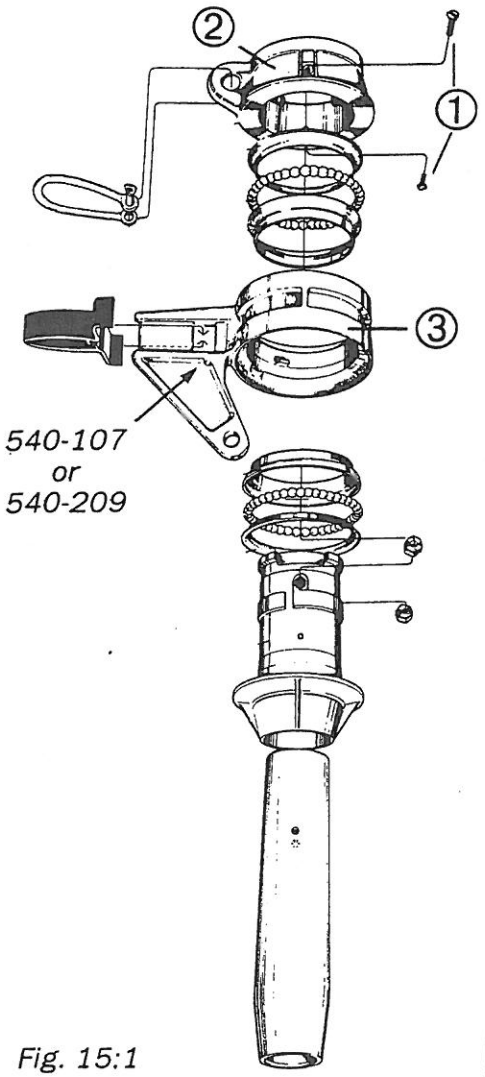


*Fig. 15:1*

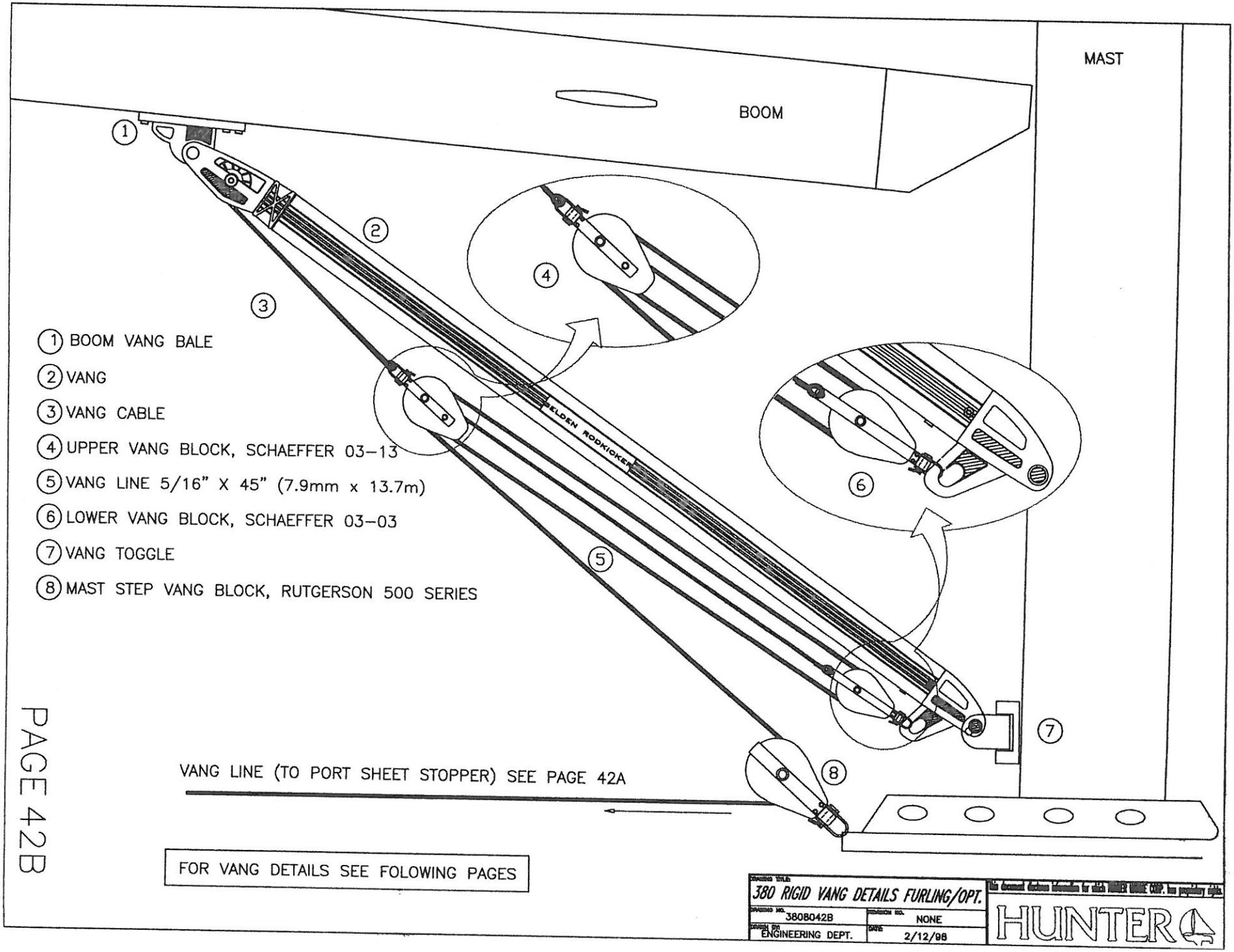
MAST
BOOM
ELDEN RODKICKER
1 BOOM VANG BALE
2 VANG
3 VANG CABLE
4 UPPER VANG BLOCK, SCHAEFFER 03-13
5 VANG LINE 5/16" X 45" (7.9mm x 13.7m)
6 LOWER VANG BLOCK, SCHAEFFER 03-03
7 VANG TOGGLE
8 MAST STEP VANG BLOCK, RUTGERSON 500 SERIES
VANG LINE (TO PORT SHEET STOPPER) SEE PAGE 42A
FOR VANG DETAILS SEE FOLOWING PAGES
380 RIGID VANG DETAILS FURLING/OPT.
3808042B
NONE
ENGINEERING DEPT.
2/12/98
HUNTER

# RODKICKER 10/20/30

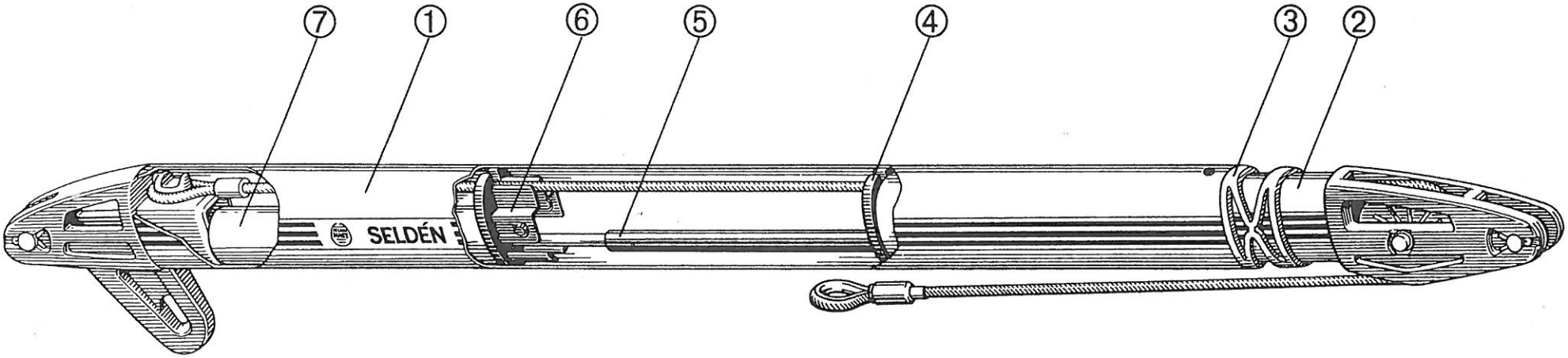


## A. Montage Gasfjäder

För Rodkickar utan gasfjäder, gå direkt till avdelning B.

1. Ta ut gasfjäder ⑤ och tillhörande ändplugg ≈ ur sin förpackning.
2. Gänga på ändpluggen ⑥ på gasfjäderns kolvstångsände (den smala delen). Om ändpluggen har flänsar, skall dessa vändas mot gasfjädern.
3. Lossa den övre bussningen ③, monterad med två snäppfästen, genom att trycka in båda fästena samtidigt.
4. Det smala röret ② går nu att dra ut. Ta loss ändpluggen ④.
5. I ändpluggen ④ finns ett gängat hål. Gänga på gasfjäderns

## A. Fitting the gas cylinder

For Rodkickers without gas cylinders go direct to B.

1. Remove the gas cylinder ⑤ with its end plug from its wrappings.
2. Screw the end plug ⑥ on to the thin end of the gas cylinder. Ensure that the flat end of the plug faces away from the cylinder.
3. Remove the upper bushing ③ by pressing in both snap-fasteners simultaneously.
4. Withdraw the small tube ②. Remove the endplug ④.

## A. Montage der Gasfederung

Für Rodkicks ohne Gasfederung, lesen Sie bitte unter Abscnitt B weiter.

1. Nehmen Sie die Gasfederung ⑤ und den dazugehörigen Plastik-Endbeschlag ⑥ aus seiner Verpackung.
2. Schrauben Sie den Endbeschlag ⑥ auf das Kolbenstangenende (das dünne Ende). Wenn der Plastik-Endbeschlag Flanschen hat, sollen diese zur Gasfeder gerichtet werden.
3. Lösen Sie die obere Buchse ③ des Rodkicks, (Die Buchse ist mit zwei Schnappverschlüßen befestigt) durch gleichzeitiges drücken der Verschlüsse.
4. Das schmale Rohr ② läßt sich jetzt herausziehen. Nehmen Sie den Endbeschlag ④ ab.

# RODKICKER 10/20/30

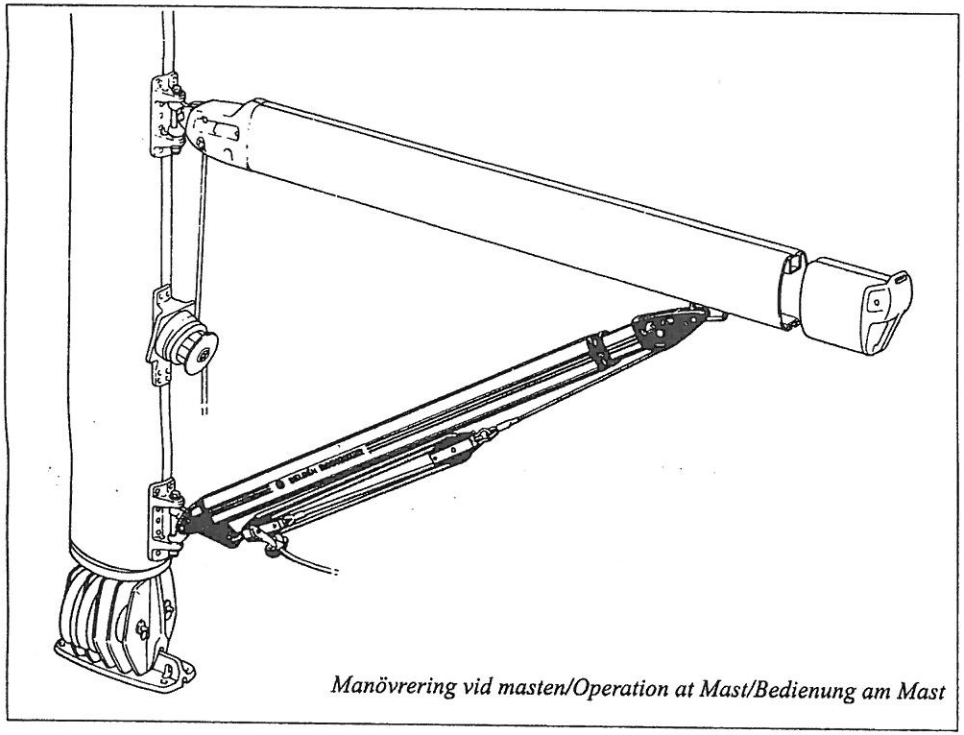

*Manövrering vid masten/Operation at Mast/Bedienung am Mast*

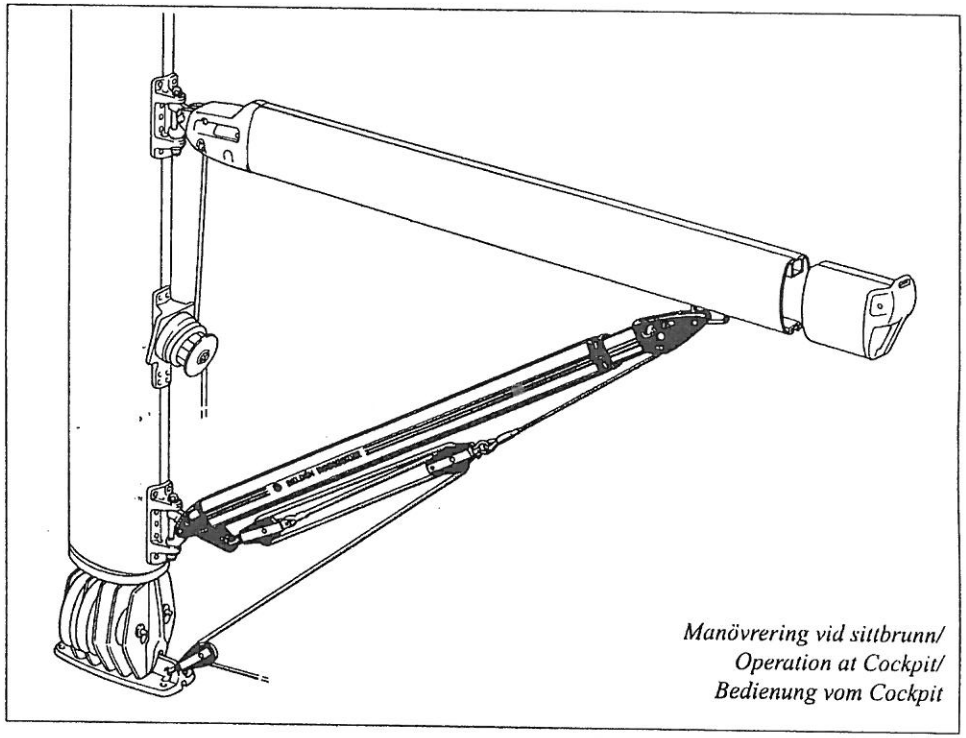

*Manövrering vid sittbrunn/ Operation at Cockpit/ Bedienung vom Cockpit*

## B. Montage av Rodkick

1. Montera/lossa bomtravaren så att den är rörlig i bommens längdriktning. Om bommen är försedd med en fast bomtravare, som ej går att flytta, måste montagepunkt B3 utföras med stor försiktighet så att Rodkicken ej skadas. Rodkickens längd i hoptryckt läge kan ändras genom att kapa/byta ut det nedre röret. Tag kontakt med återförsäljaren.
2. Montera Rodkicken på bom och mastfäste. Kontrollera att bomtravaren kan glida så att kicken ej utsätts för några tryckkrafter under moment B 3.
3. Hissa storseglet och skota hem hårt. Kontrollera att

## B. Fitting the Rodkicker

1. Fit the boom-slider so that it is moveable along the boom. If the boom has a fitting that cannot be moved, great care must be taken to avoid damaging the Rodkicker when executing point B 3 below. The length of the Rodkicker in its compressed state can be altered by shortening or replacing the larger tube. Contact your dealer.
2. Fit the Rodkicker to the boom and the mast fittings. ensure that the boom slider can slide som that the Rodkicker is not subjected to any compression forces during point B 3 below.
3. Hoist the mainsail, and sheet home hard whilst ensuring that the Rodkicker does not "bottom".

## B. Montage des Rodkicks

1. Montieren Sie oder lösen Sie den Baumrutscher, damit er in der Längsrichtung beweglich ist. Sollte der Baum mit einer starren Baumniederholer-Befestigung versehen sein, welche sich nicht verschieben läßt, so muß unter Punkt 3 in der Montageanleitung mit größter Vorsicht vorgegangen werden um den Rodkick nicht zu beschädigen. Die Länge des Rodkicks in zusammengedrücktem Zustand kann verändert werden durch Kürzen oder Tauschen des unteren Rohres. Bitte sprechen Sie mit unserem Wiederverkäufer.
2. Montieren Sie den Rodkick am Baum- und Mastbeschlag. Kontrollieren Sie, daß der Baumrutscher gleitet, sodaß der Niederholer keinen Druckbelastungen ausgesetzt wird

cylinderdel (den tjocka änden). Rikta in ändpluggarna ④ och ⑥ på linje t.ex. med hjälp av en bordsskiva. I vissa gasfjädersatser av typ HARD (hård) och EXTRA HARD (extra hård) måste den befintliga ändpluggen ersättas med en med större gängat hål. En sådan extra ändplugg finns i gasfjädersatsen. VAR FÖRSIKTIG SÅ ATT DE HOPKOPPLADE DELARNA EJ BRYTES.

6. Håll undan wiren och skjut in distansröret ⑦ i det grövre röret ända ner till ändbeslaget.
7. Skjut försiktigt ner de hopkopplade delarna, med ändpluggen ⑥ först, i det grövre röret ① tills gasfjäderns ändplugg når distansröret ⑦. Håll wiren sträckt, och kontrollera att den kommer i ändpluggarnas slitsar.
8. Skjut ner bussningen ③ och tryck den på plats med snäppfästena.
9. Montera dekalerna "GAS" ovanpå dekorränderna på det grövre röret, nära övre bussningen ③.

**C. Rodkicker kan kortas.**

Med hänsyn till gasfjäderns längd kan kortningen maximalt göras:

| | |
|---|---|
| Rodkicker 10: | 190 mm |
| Rodkicker 20: | 300 mm |
| Rodkicker 30: | 570 mm |

En kortning av wiren kan bli nödvändig för att taljan skall få plats.

1. Demontera Rodkicker enl. punkt A.3 och A.4, första meningen.
2. Korta det grövre röret ① genom att kapa i den övre ände där bussningen ③ satt.
3. Borra två nya hål, ø 8,5 mm, för bussningen vid den kapade änden med placering som på den avkapade biten. (21.0 + 0, -0,5 mm). Grada hål och kapytor.
4. Kapa distansröret ④ lika mycket som det grövre röret ① (endast för Rodkicker med gasfjäder.)
5. Återmontera Rodkicker enligt punkterna A.6 – A.8.

5. There is a threaded hole in the endplug ④. Carefully screw on the thick end of the gas cylinder. By placing the assembly on a bench, correct alignment of ④ and ⑥ is greatly facilitated. With some HARD and EXTRA HARD type gas springs the end-plug must be replaced by one with a larger threaded hole. This is supplied with the gas spring kit. BE CAREFUL NOT TO DAMAGE THE PARTS.
6. Hold the wire clear and push the spacer tube ⑦ in the larger tube down to the end fitting.
7. Ensuring that the wire is tight and runs in the slots of end plugs, push the assembled components carefully into the larger tube ①, with the end-plug ⑥ foremost, until the gas cylinder end-plug bottoms on the spacer tube ⑦. Check that the wire runs in the slots of the end-plugs.
8. Push the bushing ③ down, and lock it in place with its snap-fasteners.
9. Apply the "GAS" labels over of the striped labels on the larger tube near the upper bushing ③.

**C. Rodkicker can be shortened**

Depending on the length of the gas spring the maximum length reduction is:

| | |
|---|---|
| Rodkicker 10: | 190 mm |
| Rodkicker 20: | 300 mm |
| Rodkicker 30: | 570 mm |

It may be necessary to shorten the wire to make space for the tackle.

1. Dismantle the rodkicker acc. to items A.3 and A.4, first sentence.
2. Shorten the larger tube ① by cutting the end where the bushing ③ was fitted.
3. Drill two new holes (ø 8,5 mm) for the bushing at the newly cut end, to match the previous holes (21.0 + 0, -0,5 mm). Remove burrs and chamfer cut end.
4. Cut the circular spacer tube ④ by the same amount as the larger tube ① (only valid for Rodkickers with a gas spring).
5. Reassemble the Rodkicker acc. to items A.6 – A.8.

5. In dem unteren Endbeschlag dieses Rohres ④ befindet sich ein Loch mit Gewinde. Schrauben Sie hier vorsichtig den Zylinderteil der Gasfenderung fest (das dickere Ende). Montieren Sie die Endbeschläge ④ und ⑥ so, daß sie fluchten, z.b. mit Hilfe einer Tischkante. Bei einigen Gasfeder-Bausätzen vom Typ HARD (hart) under EXTRA HARD (extra hart) muß der vorhandene Endbeschlag gegen einen mit größerem Loch ausgetauscht werden (mit Gewinde versehen). Dieser extra Endbeschlag ist in dem Gasfederbausatz enthalten. VORSICHT BITTE, DAMIT DIE ZUSAMMENGESCHRAUBTEN TEILE NICHT GEKNICKT WERDEN.
6. Halten Sie das Drahtseil fern und schieben Sie das Distanzrohr ⑦ bis zum Endbeschlag in das dickere Rohr.
7. Halten Sie das Drahtseil gestreckt und kontrollieren Sie, daß es in den Schlitzen der Endbeschläge liegt. Schieben Sie die zusammengesetzten Teile vorsichtig, mit dem Endbeschlag ⑥ zuerst, in das dickere Rohr ① bis der Endbeschlag der Gasfederung das Distanzrohr ⑦ erreicht. Kontrollieren Sie, daß das Drahtseil in den Schlitzen der Endbeschläge liegt.
8. Schieben Sie die Buchse ③ nach unten, bis die Schnappverschlüsse einrasten.
9. Kleben Sie das Bild "GAS" auf die Dekorationsränder des dickeren Rohres, nahe der oberen Buchse ③.

**C: Der Rodkicker kann verkürzt werden.**

In Hinsicht auf die Länge der Gasfeder kann die Verkürzung maximal beim:

| | |
|---|---|
| Rodkicker 10: | 190 mm |
| Rodkicker 20: | 300 mm |
| Rodkicker 30: | 570 mm werden. |

Eine Verkürzung der Drahtseils kann notwendig werden, damit die Talje Platz hat.

1. Demontieren Sie den Rodkicker laut Punkt A.3 und A.4 erster Satz.
2. Verkürzen Sie das dickere Rohr ① wo die Buchse ③ saß.
3. Bohren Sie zwei neue Löcher für die Buchse, ø 8,5 mm, am abgeschnittenen Rohrende mit dem abgeschnittenen Teil als Vorlage (21.0 + 0, -0,5 mm). Entgraten Sie die Löcher und die Schnittkar.
4. Schneiden Sie das Distanzrohr ④ wie das dickere Rohr ① ab. (gilt nur für Rodkicker mit Gasfeder).
5. Montieren Sie den Rodkicker wieder laut Punkt A6 – A8.

SELDÉN MAST SELDÉN

*Seldén Mast AB, Redegatan 11, SE-426 77 V. Frölunda, Sweden.*
*Tel +46 (0)31 69 69 00. Fax +46 (0)31 29 71 37. e-mail info@seldenmast.com. Internet www.seldenmast.com*
*Seldén Masts Limited, Duncan Road, Park Gate, Southampton, Hampshire SO31 1BX, England.*
*Tel +44 (0)1489 48 40 00. Fax +44 (0)1489 48 74 87. e-mail selden.ltd@dial.pipex.com. Internet www.seldenmast.com*

Rodkicken ej går "i botten".

4. Skjut ihop kicken så att övre beslaget vilar mot den fjädrande bussningen. Använd kicktaljan. Om en gasfjäder är monterad fordras en kraft på 600–5000 N ("60–500 kg") beroende på vilken fjäder som är monterad.
5. Marktera travarens läge på bommen.
6. Montera travaren provisoriskt ca 5 mm AKTER OM markeringen.
7. Hissa storseglet igen och kontrollera att Rodkicken ej går "i botten". Upprepa kontrollen för revat storsegel (alla rev).
8. Kontrollera hur bommen, i sitt viloläge, kommer i förhållande till vindrutor, sprayhood, mantåg etc.
9. Montera bomtravaren permanent.

I hamn och vid motorgång bör bommen säkras i sitt höjdläge med hjälp av storfallet eller dirkstropp. Beträffande olika arrangement av kicktaljan, se ovan.

Rodkicker kan kortas. Se omstående sida, rubrik C.

**OBS. För att gasfjäderns kolvstångspackning ej skall torka måste gasfjädern användas/förvaras med kolvstångsänden lägre än den tjockare cylinderänden d.v.s. Rodkicken användes/-förvaras med den grövre profilen lägre än den smalare.**

4. Compress the Rodkicker until the upper fitting just rests against the upper bushing. Use the kicking strap. If a gas cylinder is fitted, a force of between 600–5000 N (60–500 kg) is required depending upon which cylinder is fitted.
5. Mark the position of the slider on the boom.
6. Provisionally fix the slider approximately 5 mm (3/16") AFT OF the mark.
7. Again hoist the mainsail and check that the Rodkicker does not "bottom". Repeat hoisting and checking with the mainsail reefed – go through all reefs.
8. Allow the boom to rest, and check its level in relation to the sprayhood, wind screen, lifelines etc.
9. Secure the boom-slider in its permanent position.

When in habour, or under power, the boom level should be maintained by using a topping lift strop or the main halyard. Re alternative kicking strap arrangements see above.

The Rodkicker can be shortened. See overleaf, heading C.

**NOTE. To prevent the gas cylinder piston packing drying out, the cylinder must be used, parked, and stored with the piston rod end lower than the end of the thicker cylinder (i.e. the larger end of the Rodkicker lower than the smaller end.)**

(siehe Punkt B 3).

3. Heißen Sie das Großegel und holen Sie hart dicht. Kontrollieren Sie, daß der Rodkick dabei nicht bis zum Anschlag zusammengeschoben wird.
4. Schieben Sie den Rodkick soweit zusammen, bis der obere Beschlag die federnde Buchse erreicht. Verwenden Sie die Talje. Die benötigte Kraft bei einer vorhandenen Gasfeder ist 600–5000 N (60-500 kg) abhängig von der montierten Federung.
5. Markieren Sie die Position des Rutschers im Baum.
6. Montieren Sie den Rutscher provisorisch, ca 5 mm achtern der Markierung.
7. Heißen Sie das Großegel wieder und kontrollieren Sie, daß der Rodkick nicht bis zum Anschlag zusammengeschoben werden kann. Wiederholen Sie die Kontrolle mit sämtlichen Reffs.
8. Kontrollieren Sie den Baum in der Ruhestellung im Verhältnis zur Windschutzscheibe, Sprayhood, Seereling u.s.w.
9. Montieren Sie danach den Baumrutscher permanent.

Im Hafen und bei Fahrt mit Machine sollte der Baum in seiner Stellung durch das Großfall oder der Dirk gesichert werden. Betr. verschiedener Arragements des Niederholers, siehe oben.

Der Rodkicker kann verkürzt werden. Siehe nächste Seite, Überschrift C.

**ACHTUNG: Damit die Kolbenstangen-Dichtung in der Gasfederung nicht trocknet, muß die Gasfederung beim Gebrauch sowie bei der Lagerung mit dem Kolbenstangenende tiefer als das dickere Zylinderende aufbewahrt werden. Das besagt, der Rodkick soll mit dem dicken Teil nach unten verwendet bezw. gelagert werden.**

SELDÉN MAST SELDÉN

*Seldén Mast AB, Redegatan 11, SE-426 77 V. Frölunda, Sweden.*
*Tel +46 (0)31 69 69 00. Fax +46 (0)31 29 71 37. e-mail info@seldenmast.com. Internet www.seldenmast.com*
*Seldén Masts Limited, Duncan Road, Park Gate, Southampton, Hampshire SO31 1BX, England.*
*Tel +44 (0)1489 48 40 00. Fax +44 (0)1489 48 74 87. e-mail selden.ltd@dial.pipex.com. Internet www.seldenmast.com*

THIS PAGE UPDATED AS OF 12-1-98

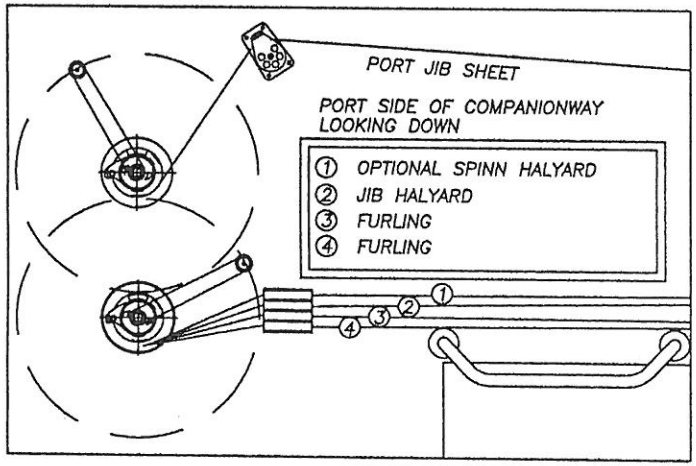


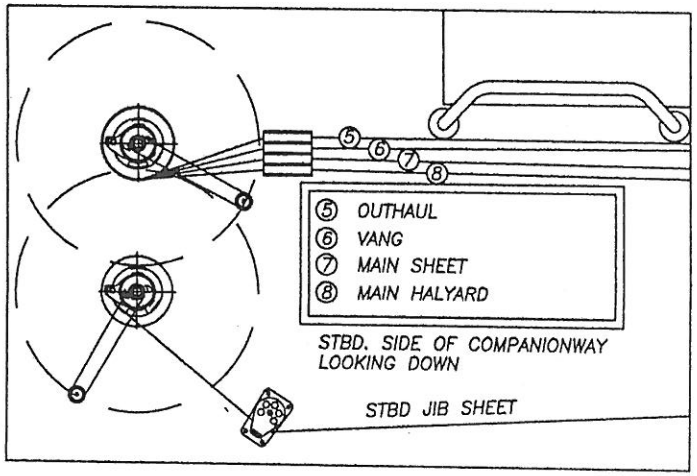


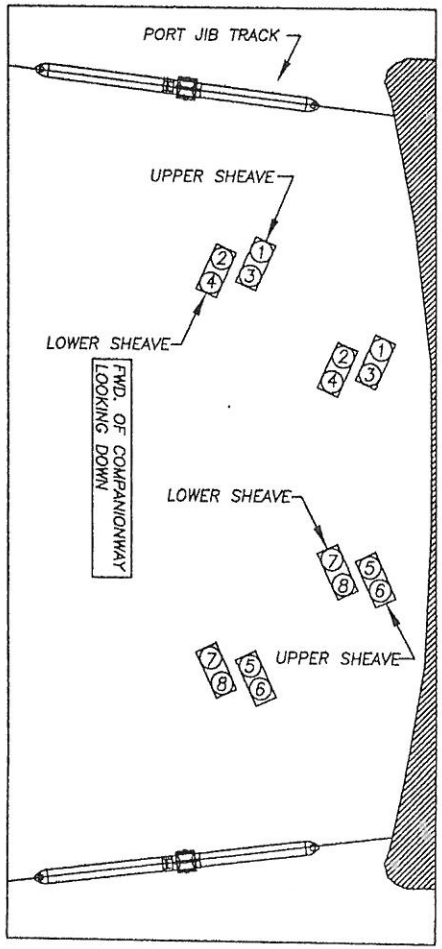


FURLING MAST STEP W\SPINNAKER OPTION

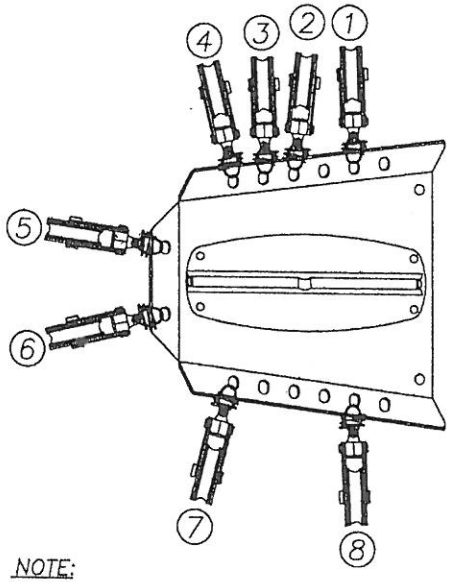


NOTE:

BLOCK NUMBERS 2,3,5 ... RUTGERSON SERIES 500 W/ SPRINGS

BLOCK NUMBERS 1,4,6-8 ... RUTGERSON SERIES 600 W/ SPRINGS

| | |
|---|---|
| DRAWING TITLE: 380 RUN. RIG & MAST STEP DETAIL (FURLING) | This document discloses information for which HUNTER MARINE CORP. has proprietary rights. |
| DRAWING NO. 3808042A-2 | REVISION NO. NONE |
| DRAWN BY: ENGINEERING DEPT | DATE: 2/11/98 |

HUNTER

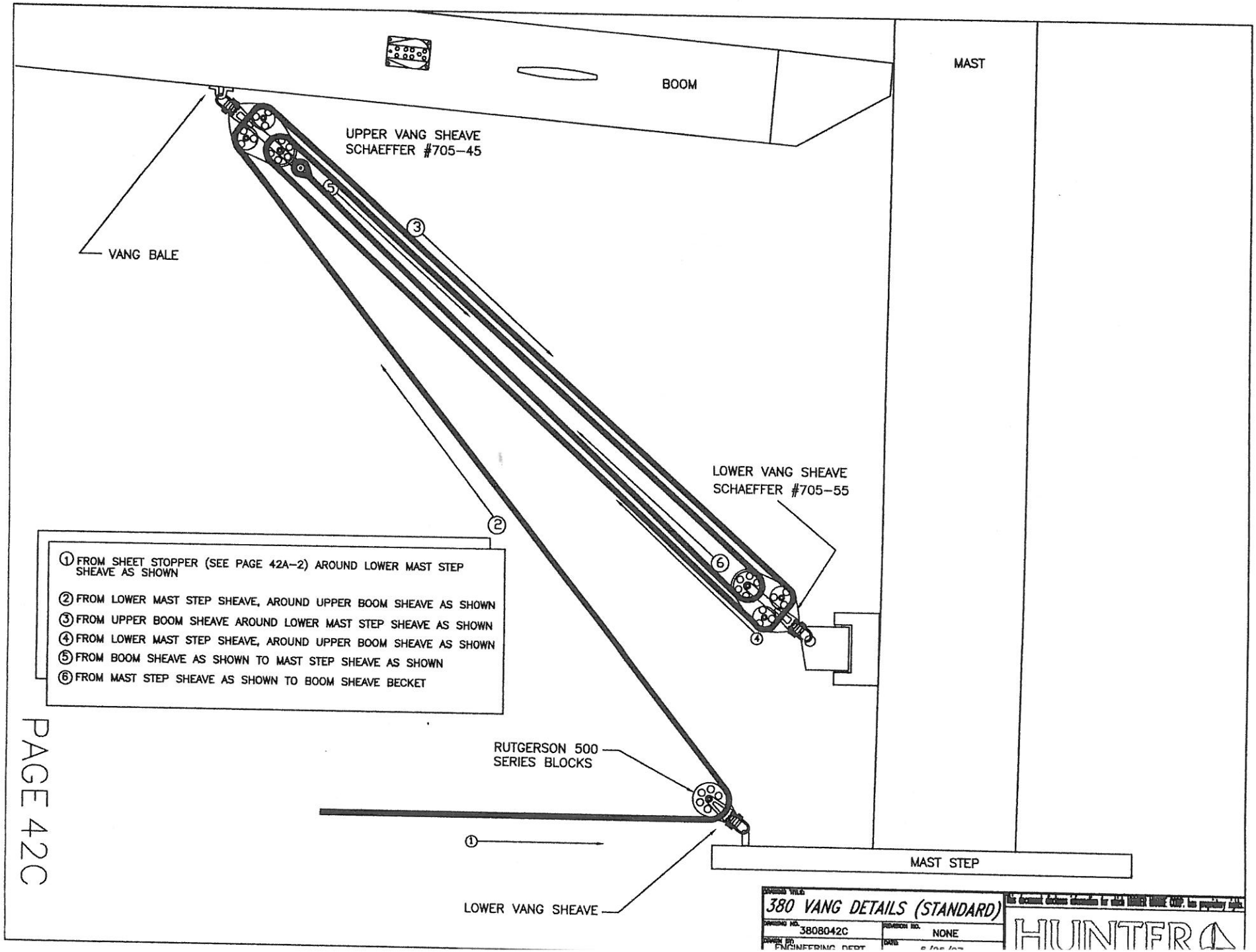
BOOM
MAST
UPPER VANG SHEAVE
SCHAEFFER #705-45
VANG BALE
LOWER VANG SHEAVE
SCHAEFFER #705-55
RUTGERSON 500
SERIES BLOCKS
MAST STEP
LOWER VANG SHEAVE
① FROM SHEET STOPPER (SEE PAGE 42A-2) AROUND LOWER MAST STEP SHEAVE AS SHOWN
② FROM LOWER MAST STEP SHEAVE, AROUND UPPER BOOM SHEAVE AS SHOWN
③ FROM UPPER BOOM SHEAVE AROUND LOWER MAST STEP SHEAVE AS SHOWN
④ FROM LOWER MAST STEP SHEAVE, AROUND UPPER BOOM SHEAVE AS SHOWN
⑤ FROM BOOM SHEAVE AS SHOWN TO MAST STEP SHEAVE AS SHOWN
⑥ FROM MAST STEP SHEAVE AS SHOWN TO BOOM SHEAVE BECKET
380 VANG DETAILS (STANDARD)
3808042C
NONE
ENGINEERING DEPT
HUNTER

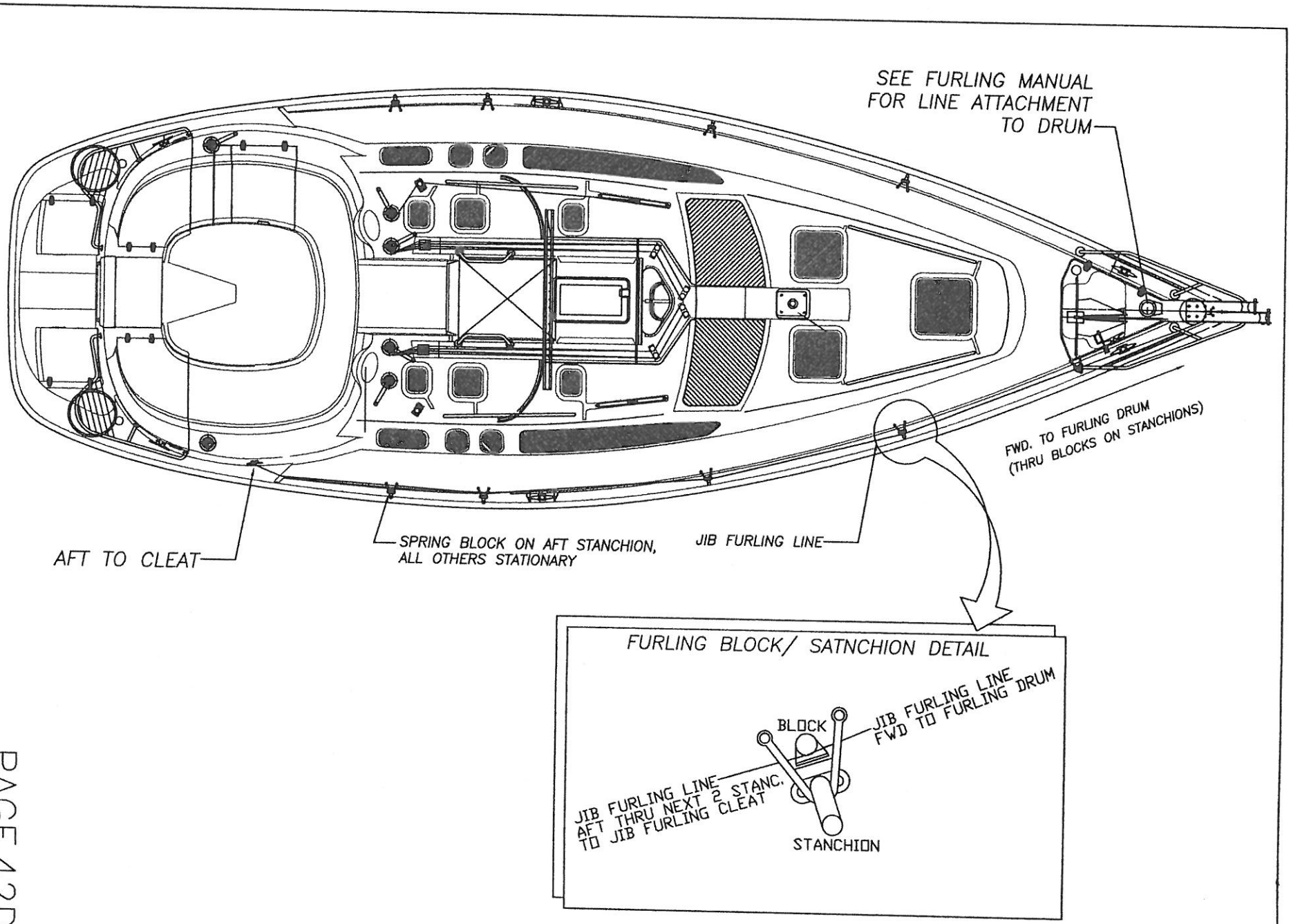


JIB FURLING SYSTEM

DRAWING TITLE: 380 JIB FURLING LINES LAYOUT

DRAWING NO. 3808042D

REVISION NO. NONRE

This document discloses information for which WINER MARINE CORP. has proprietary rights.

UNITED

STANDARD MAINSHEET PURCHASE (ENDBOOM)

① BALE, MAINSHEET END
② BALE, MAINSHEET BLOCK
③ EXIT, MAINSHEET

NOTE:
SEE PAGE 43C FOR ENDBOOM TRAVELER DETAILS

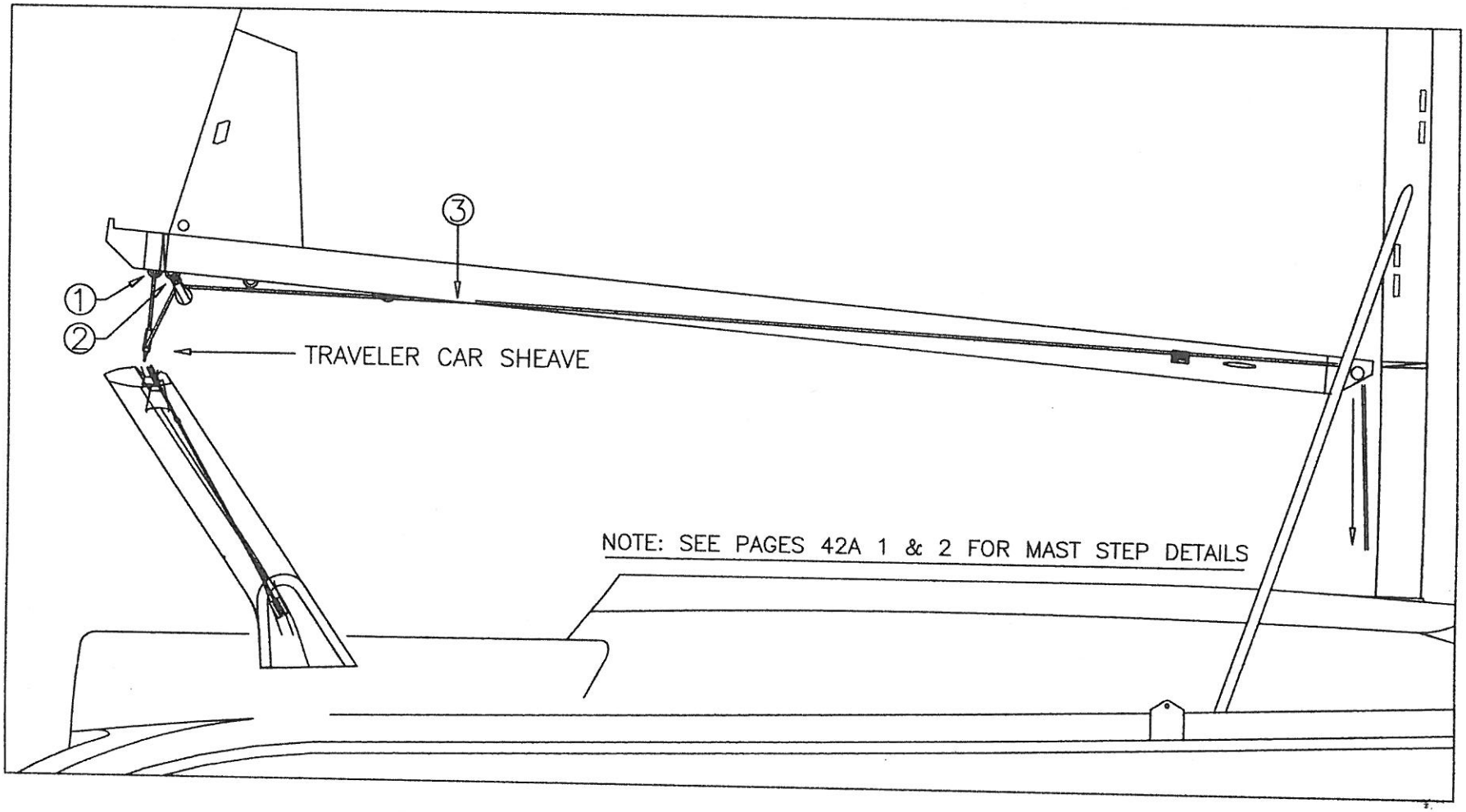


| | |
|---|---|
| DRAWING TITLE: 380 MAINSHEET PURCHASE | This document discloses information for which HUNTER MARINE CORP. has proprietary rights. |
| DRAWING NO. 3808043A | REVISION NO. NONE |
| DRAWN BY: ENGINEERING DEPT. | DATE: 5/28/98 |

HUNTER

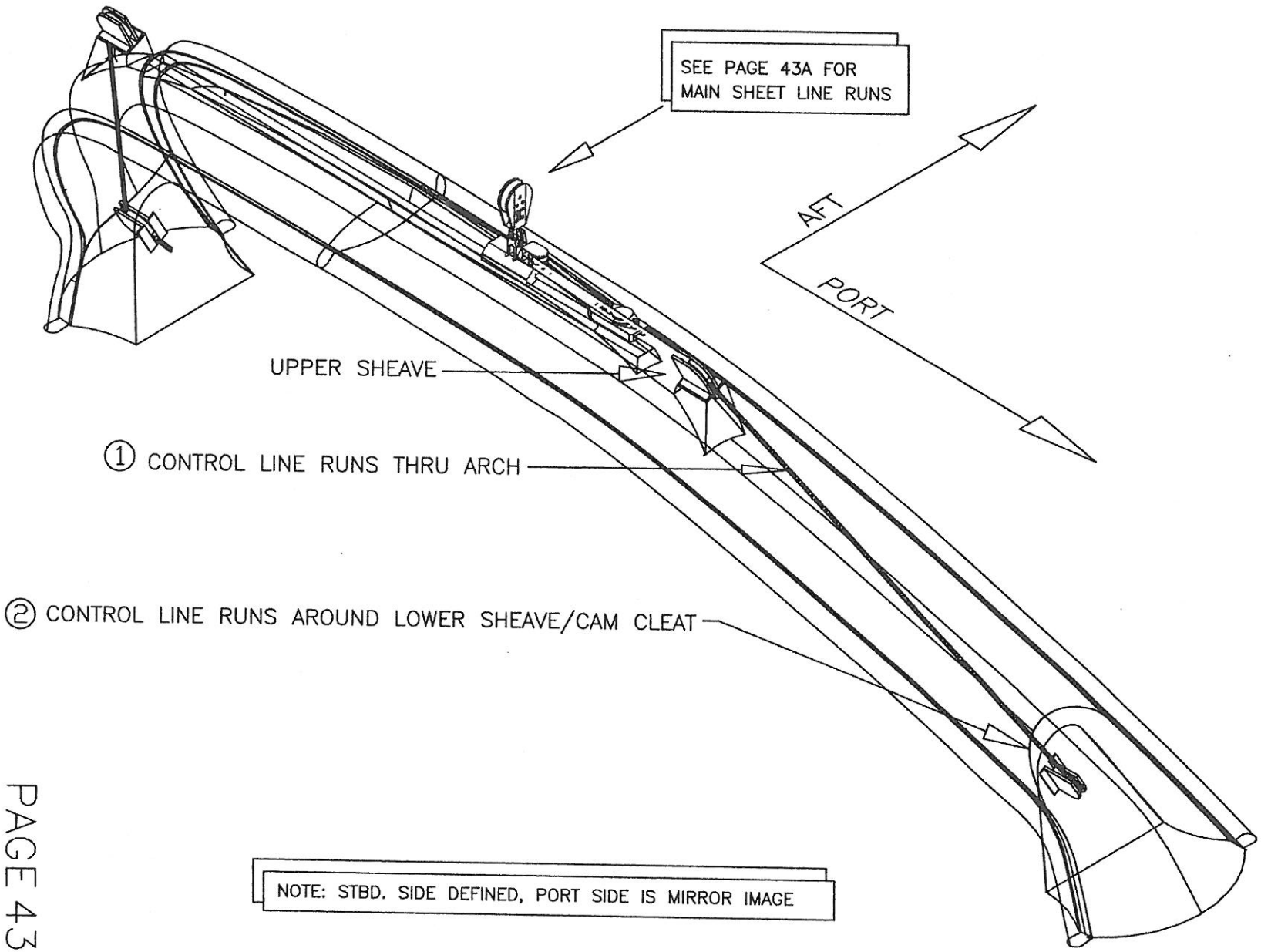


NOTE: STBD. SIDE DEFINED, PORT SIDE IS MIRROR IMAGE

DRAWING TITLE: 380 TRAV. CONTROL LINE DETAILS

DRAWING NO. 3808043B | REVISION NO. NONE

DRAWN BY | DATE

This document discloses information for which HUNTER MARINE CORP. has proprietary rights.

HUNTER

NOTE:
ARCH & TRAVELER BAR NOT SHOWN FOR CLARITY.
PORT SIDE SHOWN, STARBOARD SIDE IS MIRROR IMAGE
SEE FOLLOWING PAGE FOR MORE DETAILS

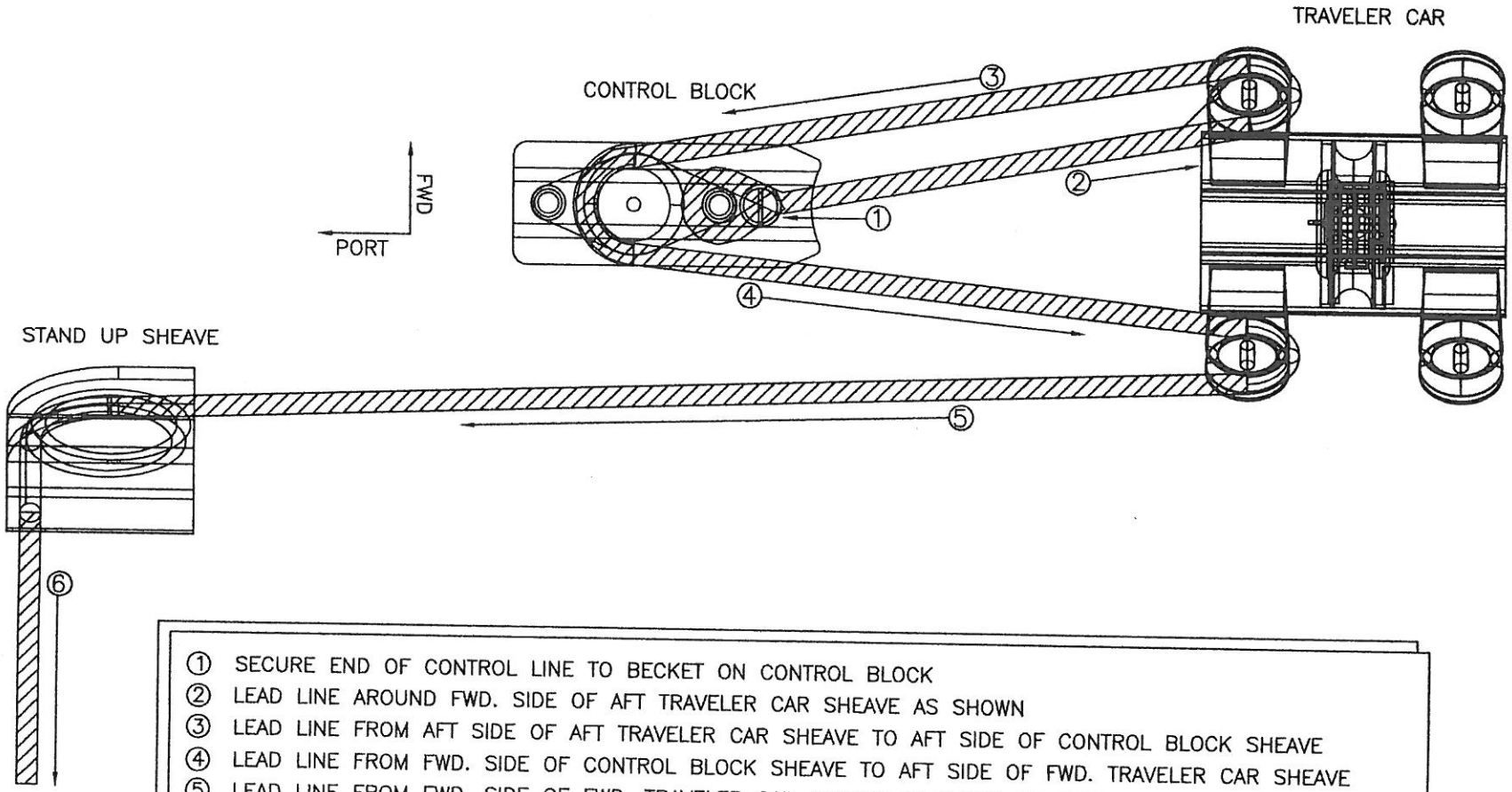


① SECURE END OF CONTROL LINE TO BECKET ON CONTROL BLOCK
② LEAD LINE AROUND FWD. SIDE OF AFT TRAVELER CAR SHEAVE AS SHOWN
③ LEAD LINE FROM AFT SIDE OF AFT TRAVELER CAR SHEAVE TO AFT SIDE OF CONTROL BLOCK SHEAVE
④ LEAD LINE FROM FWD. SIDE OF CONTROL BLOCK SHEAVE TO AFT SIDE OF FWD. TRAVELER CAR SHEAVE
⑤ LEAD LINE FROM FWD. SIDE OF FWD. TRAVELER CAR SHEAVE TO STAND UP SHEAVE
⑥ LEAD LINE AROUND STAND UP SHEAVE THEN DOWN THRU ARCH AND AROUND LOWER SHEAVE TO CAM CLEAT

DRAWING TITLE: 380 STANDARD ENDBOOM MAINSHEET TRAVELER
DRAWING NO. 3808043C
REVISION NO. NONE
DRAWN BY:
DATE:
This document discloses information for which HUNTER MARINE CORP. has proprietary rights.
HUNTER

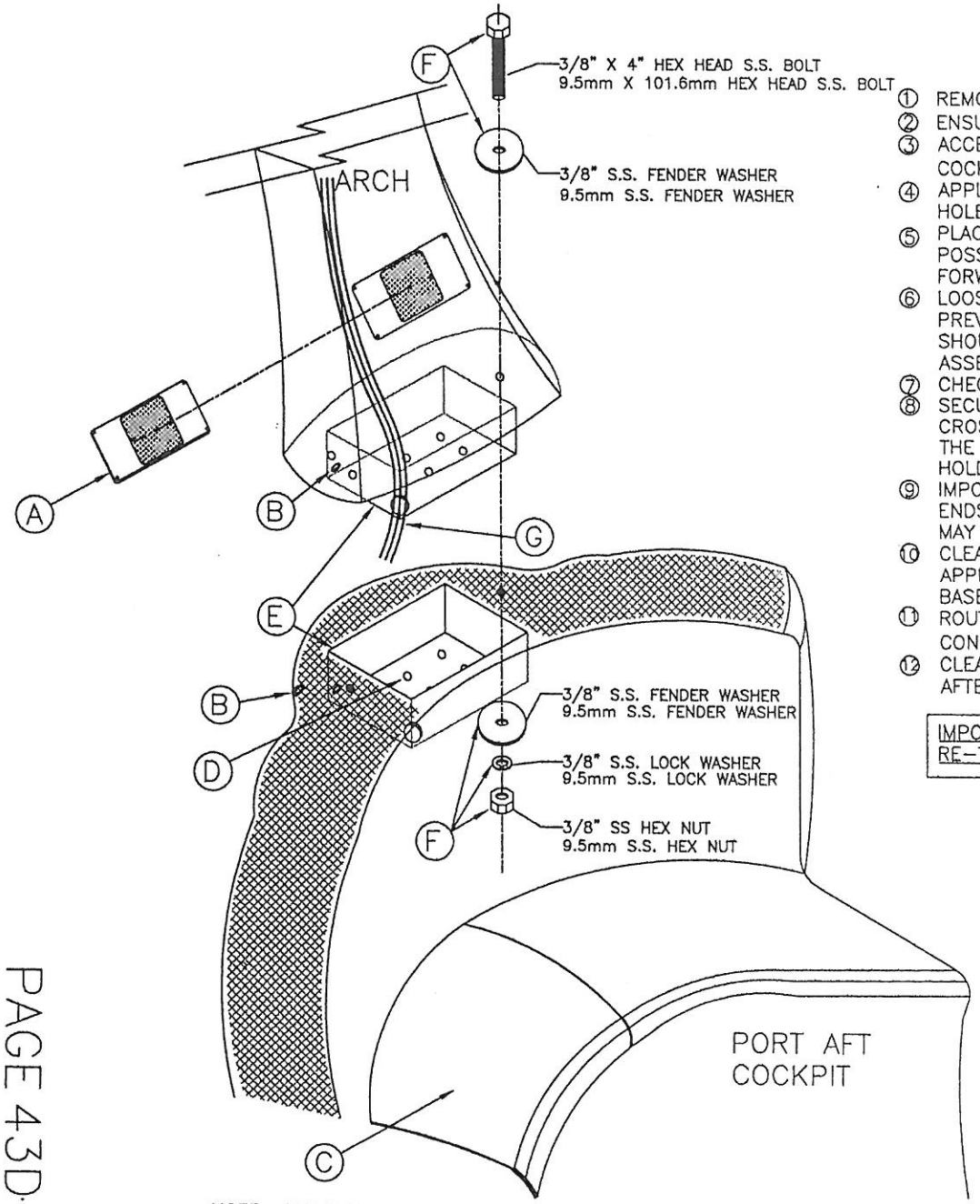


PROCEDURE REQUIRES 3 PEOPLE

1. REMOVE ARCH BASE ACCESS COVERS. (A)
2. ENSURE DRAINS IN ARCH RECIEVERS ARE FREE AND CLEAR. (B)
3. ACCESS UNDERSIDES OF ARCH DECK RECIEVERS THROUGH THE AFT COCKPIT LOCKERS, PORT AND AFT STBD. (C)
4. APPLY DOW CORNING 999 WHITE SEALANT AROUND MOUNTING BOLT HOLES IN DECK. (D) 6 PER SIDE
5. PLACE ARCH BASE INTO ARCH RECIEVERS. (E) NOTE: TO AVOID POSSIBLE INJURY, ORIENT THE DIRECTION OF THE ARCH (LEANING FORWARD) PRIOR TO INSTALLING INTO RECIEVERS.
6. LOOSELY INSTALL MOUNTING BOLTS, WASHERS AND NUTS. NOTE: TO PREVENT "GALLING" THREADS, A SMALL AMOUNT OF NEVER SEIZE SHOULD BE APPLIED TO THE THREADS OF ALL BOLTS. (F) 6 ASSEMBLIES PER SIDE
7. CHECK FIT OF ARCH INTO RECIEVERS AND ADJUST ACCORDINGLY.
8. SECURELY TIGHTEN ALL ARCH MOUNTING BOLTS AND NUTS USING A CROSS TIGHTENING PATTERN. THIS WILL ALLOW BOTH SIDES OF THE ARCH TO TIGHTEN EVENLY AGAINST THE COAMING. CONTINUE HOLDING THE ARCH UPRIGHT UNTIL IT HAS BEEN FULLY SECURED.
9. IMPORTANT: WHILE TIGHTENING, CHECK TO ENSURE THE RUBRAIL ENDS NESTS PROPERLY AGAINST THE COAMING. SOME TRIMMING MAY BE NECESSARY.
10. CLEAN OFF EXCESS SEALANT FROM ARCH AND DECK AREAS. APPLY A BEAD OF DOW CORNING 999 WHITE SEALANT AROUND BASE OF ARCH.
11. ROUTE SPEAKER AND LIGHT WIRING FROM THE ARCH TO DECK AND CONNECT ACCORDINGLY. (G) (SEE PAGE 43E)
12. CLEAN ARCH DRAINS OF ANY EXCESS CAULK OR OTHER DEBRIS AFTER COMPLETING INSTALLATION.

IMPORTANT: CHECK ALL ARCH BOLTS AFTER INITIAL SEA TRAIL, RE-TIGHTEN AS NEEDED.

SUGGESTED TOOL LIST

- 3/8" DRIVE RATCHET
- 6" EXTENSION
- 9/16" SOCKET
- 9/16" WRENCH
- SCREW DRIVERS
  - *FLAT HEAD
  - *PHILLIPS HEAD
- CAULK GUN
- TUBE SEALANT (DOW CORNING 999)
- NEVER SEIZE (BOLT LUBE)
- RAZOR KNIFE
- ALCOHOL / CLEANUP

NOTE: ONCE THE ARCH HAS BEEN SET INTO PLACE, CONTINUE HOLDING IT UPRIGHT UNTIL IT HAS BEEN SECURED COMPLETELY.

| | |
|---|---|
| DRAWING TITLE: 380 OPTIONAL ARCH INSTALLATION INSTRUCTIONS | This document discloses information for which HUNTER MARINE CORP. has proprietary rights. |
| DRAWING NO. 3808043D | REVISION NO. NONE |
| DRAWN BY: ENGINEERING DEPT. | DATE: 4/23/98 |

HUNTER

THIS PG UPDATED AS OF 12.9.98

SLIDE THE BOLTROPE ON THE TWO HALVES OF THE COVER INTO THE BOLTROPE TRACKS (1) ON BOTH SIDES OF THE BOOM. START FROM THE AFT END AND MAKE YOUR WAY FORWARD.

INSTALL THE 18' PVC BATTENS (2) INTO EACH HALF OF THE SAIL COVER. THERE ARE POCKETS (3), THAT OPEN TOWARDS THE FRONT, ON THE INSIDE OF THE COVER. SLIDE THE BATTENS INTO PLACE FROM THE FRONT, AND ROLL THE INSIDE LIP OF THE POCKET BACK IN ORDER TO HOLD THE BATTENS STATIONARY.

FEED THE LAZYJACK LINES (4) DOWN THROUGH THE GROMMETS (5) IN THE SAIL COVER, STARTING AT THE TOP AND COMING OUT AT THE BOTTOM OF THE COVER. DEAD END THE LINES TO THE BAILS ON THE UNDERSIDE OF THE BOOM (6).

TIE THE AFT END OF THE SAIL COVER UP TO THE TOPPING LIFT LINE USING THE PIECE OF STRING PROVIDED (7). USE HALF HITCH KNOTS TO SECURE THE COVER IN PLACE AT THE OUTER END OF THE BOOM. THE REEF LINES RUN OUT THROUGH THE COVER SLOTS (8) AND TIE OFF.

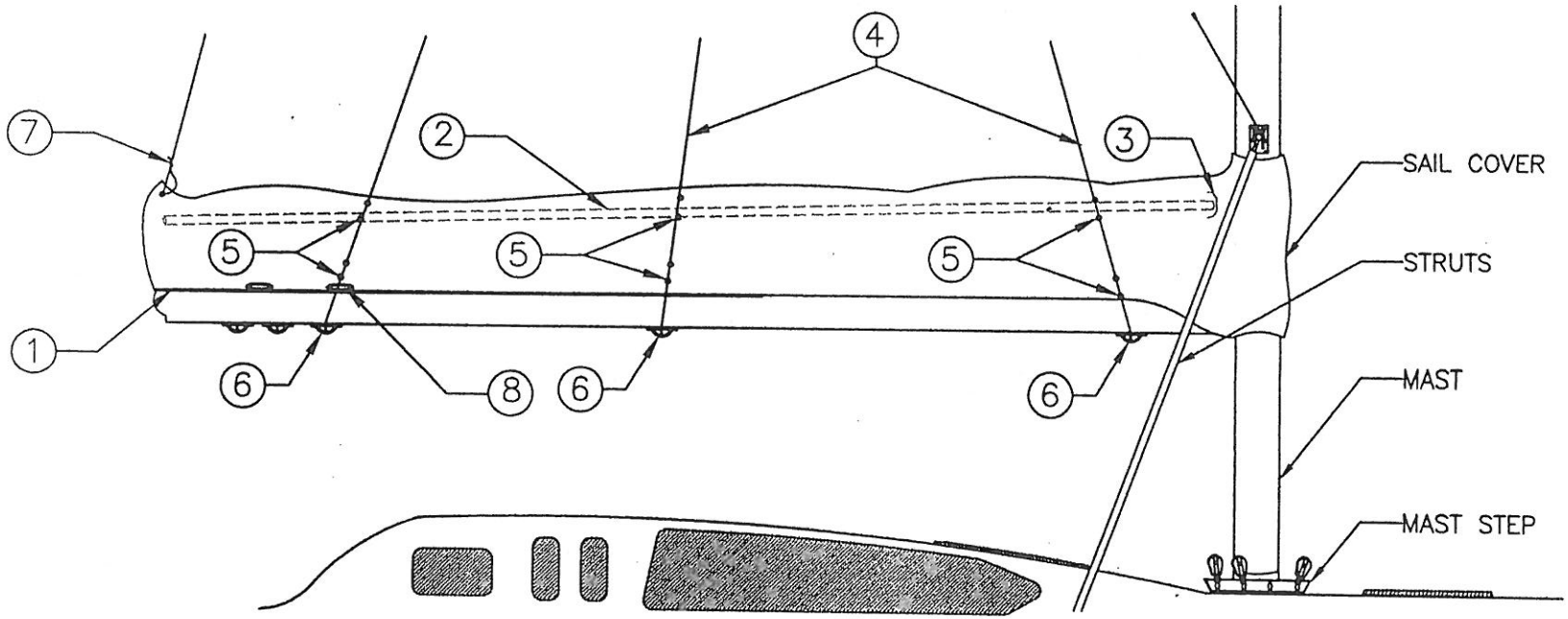


| | | |
|---|---|---|
| DRAWING TITLE: 380 HUNTER LAZYJACK SAIL COVER | | This document discloses information for which HUNTER MARINE CORP. has proprietary rights. |
| DRAWING NO. 3808043E | SCALE NONE | HUNTER |
| DRAWN BY ENGINEERING DEPT | DATE 9/11/98 | |

THIS PAGE ADDED AS OF HULL #517 (9/14/98)

SLIDE THE BOLTROPE ON THE TWO HALVES OF THE COVER INTO THE BOLTROPE TRACKS (1) ON BOTH SIDES OF THE BOOM. START FROM THE AFT END AND MAKE YOUR WAY FORWARD.

INSTALL THE 18' PVC BATTENS (2) INTO EACH HALF OF THE SAIL COVER. THERE ARE POCKETS (3), THAT OPEN TOWARDS THE FRONT, ON THE INSIDE OF THE COVER. SLIDE THE BATTENS INTO PLACE FROM THE FRONT, AND ROLL THE INSIDE LIP OF THE POCKET BACK IN ORDER TO HOLD THE BATTENS STATIONARY.

FEED THE LAZYJACK LINES (4) DOWN THROUGH THE GROMMETS (5) IN THE SAIL COVER, STARTING AT THE TOP AND COMING OUT AT THE BOTTOM OF THE COVER. DEAD END THE LINES TO THE BAILS ON THE UNDERSIDE OF THE BOOM (6).

TIE THE AFT END OF THE SAIL COVER UP TO THE TOPPING LIFT LINE USING THE PIECE OF STRING PROVIDED (7). USE HALF HITCH KNOTS TO SECURE THE COVER IN PLACE AT THE OUTER END OF THE BOOM. THE REEF LINES RUN OUT THROUGH THE COVER SLOTS (8) AND TIE OFF.

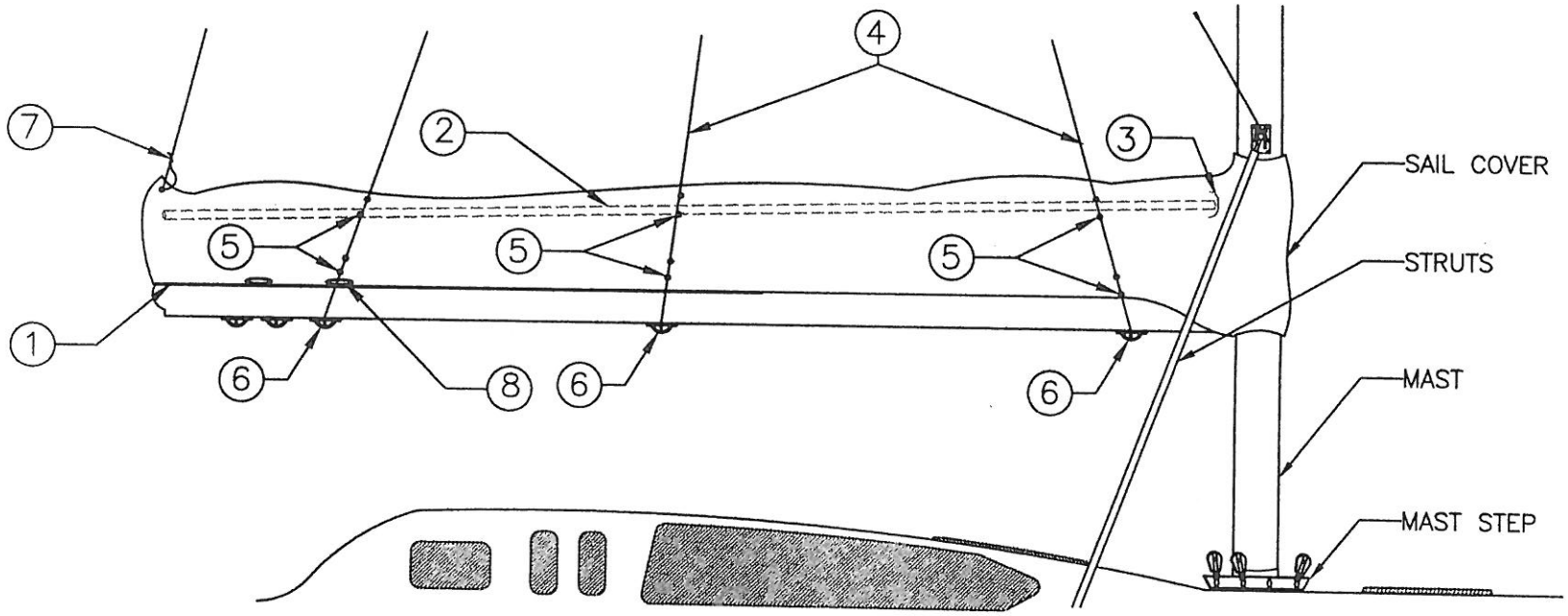


| | |
|---|---|
| DRAWING TITLE: 380 HUNTER LAZYJACK SAIL COVER | This document discloses information for which HUNTER MARINE CORP. has proprietary rights. |
| DRAWING NO. 3808043E | SCALE NONE |
| DRAWN BY: ENGINEERING DEPT | DATE: 9/11/98 |

HUNTER

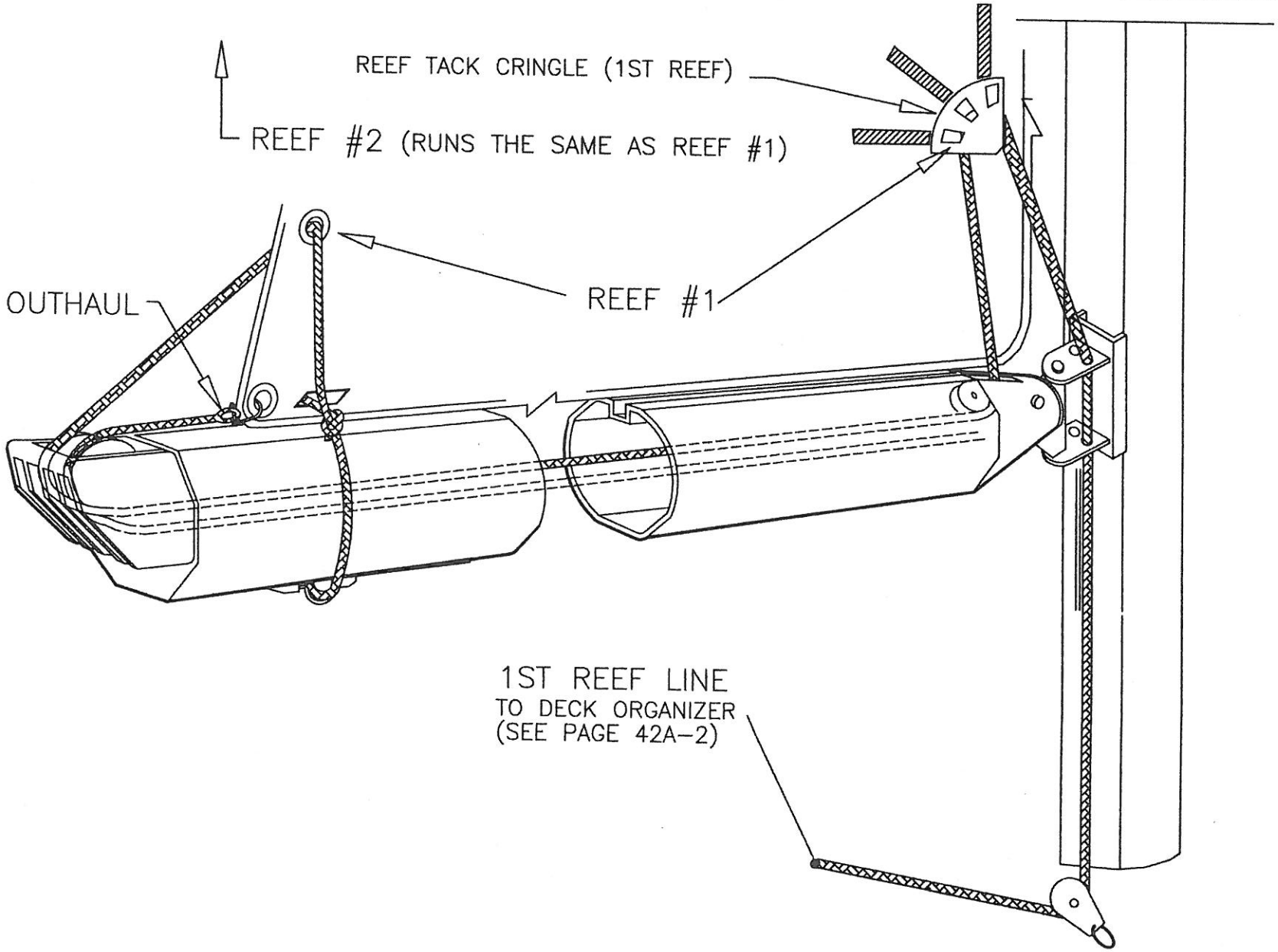


| | |
|---|---|
| DRAWING TITLE: 380 BOOM AND REEF LAYOUT | |
| DRAWING NO. 3808044A | REVISION NO. NONE |
| DRAWN BY ENGINEERING DEPT. | DATE 2/12/98 |

This drawing discloses information for which HUNTER MARINE CORP. has proprietary rights.

HUNTER

## REEFING

1. *Release tension on vang.*
2. *Ease main sheet out a couple of feet.*
3. *Wrap main halyard on winch.*
4. *Open main halyard clutch.*
5. *Ease main halyard down while simultaneously pulling in on both reef lines.*
6. *When desired reef tack is about a foot above the boom, lock off the main halyard.*
7. *Put desired reef line on the winch and tension until the tack and clew are in position.*
8. *Tension main halyard until horizontal wrinkles are gone from the luff of the sail.*
9. *Adjust main sheet and vang to suit your desired course.*
10. *Pull in extra line from the reef you are not using just to straighten up.*

## UN-REEFING

1. *Ease tension on vang and mainsheet.*
2. *Release reef line clutches.*
3. *Wrap main halyard on winch and tension until reef is removed.*
4. *Readjust mainsheet and vang to suit course.*

380/dwg/8ownman/reef.doc (m.s.word)

## PRE-MARK THE MAIN HALYARD FOR EACH REEF

1. Shackle tack reef blocks to first and second reef tack cringles.

2. Run both reefing lines as illustrated in the Boom & Reef layout. Both portions of the reefing line leading to the reef tack block must run through the stainless steel eye on the side of the spar. The shorter reef line will be used on the first reef (starboard side, GREEN) the longer reef line on the second reef (port side, RED,).

3. Raise the main sail.

4. Ease the mainsheet and vang.

5. Lower the main sail to approximately the first reef position.

6. Take up the slack in the first reefing line.

7. Adjust the main halyard so that the tack reef block is not contacting the stainless steel eye on the side of the spar and is applying tension to the luff of the main above the reef, not below. There will be approximately 6" (150 mm) of stretch in the main luff and main halyard when the reefing line is tensioned, so make sure that this is allowed for when adjusting the main halyard to locate the tack reef block.

8. Tension the reef line with the appropriate self-tailing winch until the clew reef cringle is brought down to the boom.

9. Confirm that the tack reef block is still clear of the stainless steel eye and that only the main luff above the reef cringle is tensioned, not the luff between the cringle and the top stacked sail slide. Ease the reef line and readjust the halyard if necessary.

10. Mark the halyard at the stopped with a 1" (25mm) single band of indelible marker ink. By dropping the halyard to this mark every time a reef is required the halyard is automatically in the correct position for the reef.

11. Repeat the procedure for the second reef, using double bands to mark the halyard in the correct position.

## REEFING PROCEDURE

1. Head up into the wind.

2. Ease the mainsheet and vang.

3. Check the topping life for adequate boom support.

4. Lower the main halyard to the appropriate mark, and snub the line with the stopper.

5. Tension the reefing line with the self-tailing winch until the reef clew is brought down to the boom. Apply stopper. Ease the topping lift.

## SHAKING OUT A REEF

1. Head up into the wind.

2. Ease the mainsheet and vang. Tension to topping lift.

3. Release the reef stopper and remove reef line from winch.

4. Tension the main halyard to raise sail, making sure reef lines run freely while sail is being raised. Apply stopper to main halyard.

5. Re-tension vang and mainsheet. Ease the topping lift.

# RUNNING RIGGING SPECIFICATIONS

| | | |
|---|---|---|
| BOAT: HUNTER 380 | FILE NAME: | REVISION: A |
| BY: KJC | DATE: | 7/9/98 UPDATED LENGTHS, AS PER S. PETTENGILL |
| CHECKED BY: | DATE: | |

| | OPT/STD | ITEM | QUANTITY | LINE SIZE | LINE TYPE | COLOR | END 1 | LENGTH | | END 2 |
|---|---|---|---|---|---|---|---|---|---|---|
| 1 | STD | MAIN HALYARD | 1 | 7/16" (11mm) | XLS EXTRA | BLUE | HEADBOARD SHACKLE | 37.3 m | 123 ft | BARE |
| 2 | STD | JIB HALYARD | 1 | 7/16" (11mm) | XLS EXTRA | RED | EYE | 35.4 m | 116 ft | BARE |
| 3 | STD | MAIN TRAVELER LINE | 2 | 5/16" (8mm) | LS | WHITE | SMALL EYE | 7.9 m | 26 ft | BARE |
| 4 | STD | MAINSHEET | 1 | 1/2" (12.5mm) | XLS | BLUE FLECK | SMALL EYE | 24.5 m | 80 ft | BARE |
| 5 | STD | REEFING LINE #1 | 1 | 7/16" (11mm) | LS | GREEN FLECK | BARE | 25.8 m | 85 ft | BARE |
| 6 | STD | REEFING LINE #2 | 1 | 7/16" (11mm) | LS | RED FLECK | BARE | 33.4 m | 110 ft | BARE |
| 7 | STD | JIB SHEET | 2 | 1/2" (12.5mm) | LS | RED FLECK | BARE | 12.0 m | 40 ft | BARE |
| 8 | OPT | CRUISING SPINN. SHEET | 2 | 7/16" (11mm) | LS | BLACK FLECK | BARE | 25.3 m | 83 ft | BARE |
| 9 | OPT | SPINNAKER HALYARD | 1 | 7/16" (11mm) | XLS | BLACK | SNAP SHACKLE NF11000s | 35.4 m | 116 ft | BARE |
| 10 | STD | VANG | 1 | 7/16" (11mm) | LS | WHITE | SMALL EYE | 15.2 m | 50 ft | BARE |
| | STD | BOOM TOPPING LIFT | 1 | 3/8" (9.5mm) | LS | WHITE | SMALL EYE, 3/16" D-SHACKLE | 33.9 m | 111 ft | BARE |
| 11 | STD | LAZY JACK WIRE | 2 | 1/8" (3.2mm) | PLASTIC COATED 7x7 WIRE | WHITE | EYE & THIMBLE,SMALL SHACKLE | 5.5 m | 18 ft | EYE & THIMBLE, HARKEN 125 OR EQUIVALENT |
| 12 | STD | FIXED LAZY JACK LINE | 2 | 3/8" (9.5mm) | LS | WHITE | BARE | 6.3 m | 21 ft | BARE |
| 13 | STD | ADJUSTABLE LAZY JACK LINE | 2 | 3/8" (9.5mm) | LS | WHITE | SS THIMBLE SPLICED | 8.4 m | 28 ft | BARE |



| | |
|---|---|
| DRAWING TITLE: 380 RUNNING RIGGING SPECIFICATIONS (STD) | This document discloses information for which HUNTER MARINE CORP. has proprietary rights. |
| DRAWING NO. 3808046A / SCALE NONE | HUNTER |
| DRAWN BY: ENGINEERING DEPT / DATE: 6/29/98 | |

## h380 SELDEN FURLING STANDING RIGGING SPECIFICATIONS

BY: KJC | DATE: 7-May-98 | **REVISION:** SHORTEN D3 1", 3/2/99

| | OPT/STD | ITEM | QUANTITY | WIRE SIZE | UPPER END | LENGTH | | LOWER END |
|---|---|---|---|---|---|---|---|---|
| 1 | STD | D3 | 2 | 5/16" (8mm) 1x19 | 840 SERIES GIBB TANG | 4.553 m | 14 ft. 11 1/4 in. | ME |
| 2 | STD | V2 | 2 | 5/16" (8mm) 1x19 | TOGGLE JAW | 4.667 m | 15 ft. 3 3/4 in. | ME |
| 1 | STD | D2 | 2 | 9/32" (7mm) 1x19 | 840 SERIES GIBB TANG | 4.470 m | 14 ft. 8 in. | TURNBUCKLE WITH JAW TOGGLE 3/8" PINS |
| 2 | STD | V1 | 2 | 5/16" (8mm) 1x19 | TOGGLE JAW | 5.525 m | 18 ft. 1 1/2 in. | 10-20-20 TURNBUCKLE |
| 3 | STD | D1 | 2 | 5/16" (8mm) 1x19 | 840 SERIES GIBB TANG | 5.226 m | 17 ft. 1 3/4 in. | 10-16-16 TURNBUCKLE |
| 3 | STD | UPPER DIAMOND, RD2 | 2 | 3/16" (4.75mm) 1X19 | TOGGLE JAW WITH 10mm PIN | 4.737 m | 15 ft. 6 1/2 in. | TURNBUCKLE WITH 740 SERIES GIBB TANG |
| 4 | STD | LOWER DIAMOND, RD1 | 2 | 3/16" (4.75mm) 1X19 | TOGGLE JAW WITH 10mm PIN | 4.734 m | 15 ft. 6 3/8 in. | TURNBUCKLE WITH 740 SERIES GIBB TANG |
| 5 | STD | FORESTAY | 1 | 5/16" (8mm) 1x19 | ME ***1/8" CHAMFER BOTH SIDES*** | 15.059 m | 49 ft. 4 7/8 in. | GIBB 10-16-16 TURNBUCKLE W/ JAW TOGGLE LOOSE |

ALL ADJUSTABLE RIGGING IS DIMENSIONED WITH TURNBUCKLES 2/3 OPEN
ALL TURNBUCKLES TO HAVE RIGHT HAND THREADS ON SWAGED FITTING
LENGTHS HAVE 110mm DEDUCTED FOR LINK PLATES ON D2 AND RD1, RD2

Updated 9/10/99

## 380 FURLING RUNNING RIGGING SPECIFICATIONS

| | | |
|---|---|---|
| BOAT: H380 | FILE NAME: 380 SELDEN FURLING RUNNING | REVISION: UPDATED LENGTHS 7/15/98 |
| BY: KJC | DATE: 6/24/98 | |
| CHECKED BY: | DATE: | |

| | OPT/STD | ITEM | QUANTITY | LINE SIZE | LINE TYPE | COLOR | END 1 | LENGTH | | END 2 |
|---|---|---|---|---|---|---|---|---|---|---|
| 1 | STD | MAIN HALYARD | 1 | 7/16" (11mm) | XLS EXTRA | BLUE | SMALL EYE | 37.6 m | 123 ft | BARE |
| 2 | STD | JIB HALYARD | 1 | 7/16" (11mm) | XLS EXTRA | RED | SMALL EYE | 35.1 m | 115 ft | BARE |
| 3 | STD | MAIN TRAVELER LINE | 2 | 5/16" (8mm) | LS | WHITE | SMALL EYE | 7.9 m | 26 ft | BARE |
| 4 | STD | MAINSHEET | 1 | 7/16" (11mm) | XLS | BLUE FLECK | SMALL EYE | 24.5 m | 80 ft | BARE |
| 5 | STD | JIB SHEET | 2 | 1/2" (12mm) | LS | RED FLECK | BARE | 12.3 m | 40 ft | BARE |
| 6 | OPT | SPINN. SHEET | 2 | 7/16" (11mm) | LS | BLACK FLECK | BARE | 24.5 m | 81 ft | BARE |
| 7 | STD | MAIN FURLING LINE | 1 | 3/8" (9.5mm) | LS | BLUE | BARE | 11.8 m | 39 ft | BARE |
| 8 | OPT | SPINNAKER HALYARD | 1 | 7/16" (11mm) | XLS | BLACK | SNAP SHACKLE NF11000s | 36.7 m | 120 ft | BARE |
| 9 | STD | BOOM TOPPING LIFT | 1 | 3/8" (9.5mm) | LS | WHITE | SMALL EYE W/ D-SHACKLE | 31.9 m | 105 ft | BARE |



DRAWING TITLE: 380 FUR MAST RUN. RIGGING SPECS.

DRAWING NO. 3808046B | REVISION NO. NONE

DRAWN BY: ENGINEERING DEPT. | DATE:

This document discloses information for which HUNTER MARINE CORP. has proprietary rights.

HUNTER

The B&R rig, utilized on the Hunter 380, eliminates the need for a backstay to allow for a more efficient mainsail shape. Fixed backstays are commonly being designed out of today's performance-oriented boats to allow the mainsail to incorporate a full roach design - a more aerodynamic shape both for racing and cruising performance.

To accomplish this, the B&R rig has 30 degree swept spreaders, creating 120 degrees between each rigging point. This tri-pod arrangement has excellent strength for sailboat rigs, and has been used for years to support huge radio towers.

The latest advancement to the B&R rig is the addition of mast struts. These struts stabilize the lower section of the mast, allowing compression loads to be spread, reducing the point loading at the mast base. They also create a strong point for the boom and spinnaker pole loadings. The struts function also allow us to use a smaller mast section reducing weight aloft to decrease the heeling and pitching moments, making for a more comfortable ride. Additionally, they provide a secure handhold when going forward.

The struts perform an important structural function, **therefore never sail your boat without the struts properly fitted**. If your 380 is equipped with the in-mast furling option, the mast is a larger section size and the struts are not utilized.

Additional support is given to the B&R rig (and is unique to it) with the addition of reverse diagonal rigging. For example, the diagonals that you see beginning by the top of the mast strut, ending at the tip of the spreader, supports and stabilizes the upper section of the mast as it creates a triangle with the upper shroud.

The B&R rig is designed to be pre-bent to further add rigidity to the mast section and eliminate the need for adjustable rigging (like backstay adjusters). This design should prove more reliable than a rig with adjustable backstays or runners, as there is less chance for error.

The large main, small jib, sail plan on the 380 also eliminates the need for large overlapping headsails (genoas), as the driving power comes from the much improved shape and size of the mainsail. This allows for an easier tacking small jib, creating good performance and more comfortable sailing as it is less work for the crew.

As the large main is creating additional mainsheet and leach loading, Hunter has included a cockpit arch whereby the mainsheet and leech loads are directed to the strong part of the boom (the outboard end) and is located at the heaviest loading point of the mainsail. The cockpit arch serves addition safety and comfort functions as handholds and cockpit canvas attachment points.

B&R rigs have been used on thousands of sailboats, and we are proud to incorporate this successful design on your new Hunter.

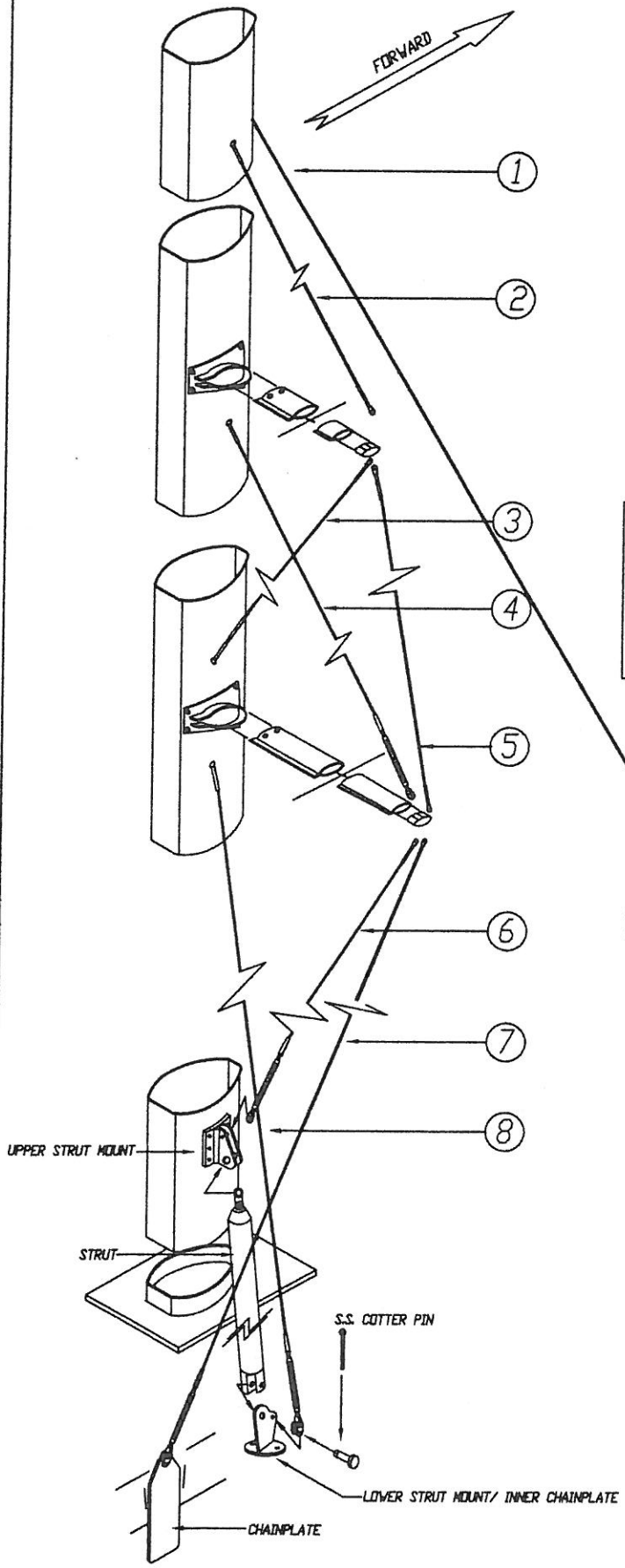


① FORESTAY 5/16 (7.9mm) 1 X 19

② D3 9/32" (7mm) 1 X 19

③ RD2 3/16" (4.8mm) 1 X 19

④ D2 7/32" (5.5mm) 1 X 19

⑤ V2 9/32" (7mm) 1 X 19

⑥ RD1 3/16" (4.8mm) 1 X 19

⑦ V1 5/16" (7.9mm) DYFORM

⑧ D1 3/8" (10mm) 1 X 19

NOTE: SEE PAGES 49A & B FOR SPREADER TIP DETAILS.

SEE PAGE 50A FOR STANDARD RIG STANDING RIG LENGHTS.

SEE PAGE 51 FOR FITTINGS DESC.

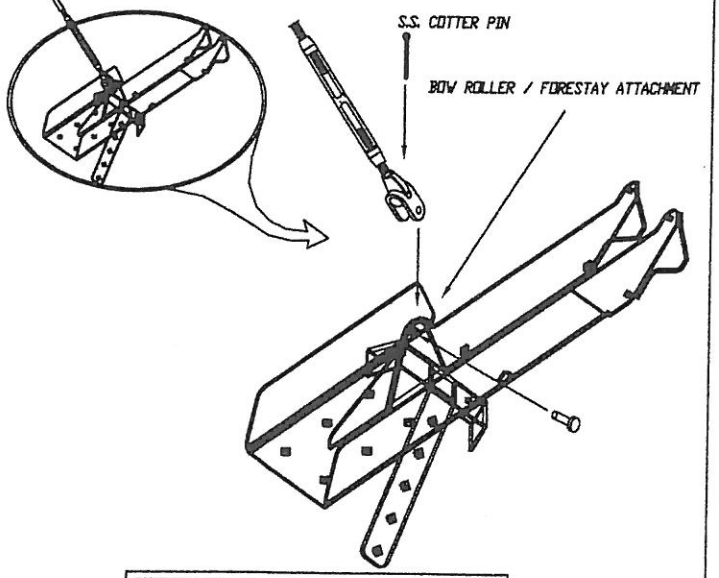


NOTE: NEVER TRY TO SAIL THE VESSEL WITHOUT THE STRUTS IN PLACE AND PROPERLY FASTENED (SEE PAGE 48B)

NOTE: IN-MAST FURLING OPTION USES A LARGER MAST SECTION AND THE STRUTS ARE NOT UTILIZED. SEE FOLLOWING PAGE

HUNTER

380 STANDING RIGGING (STANDARD)

380808048A-1 | NONE | 6/24/97

ENGINEERING DEPT.

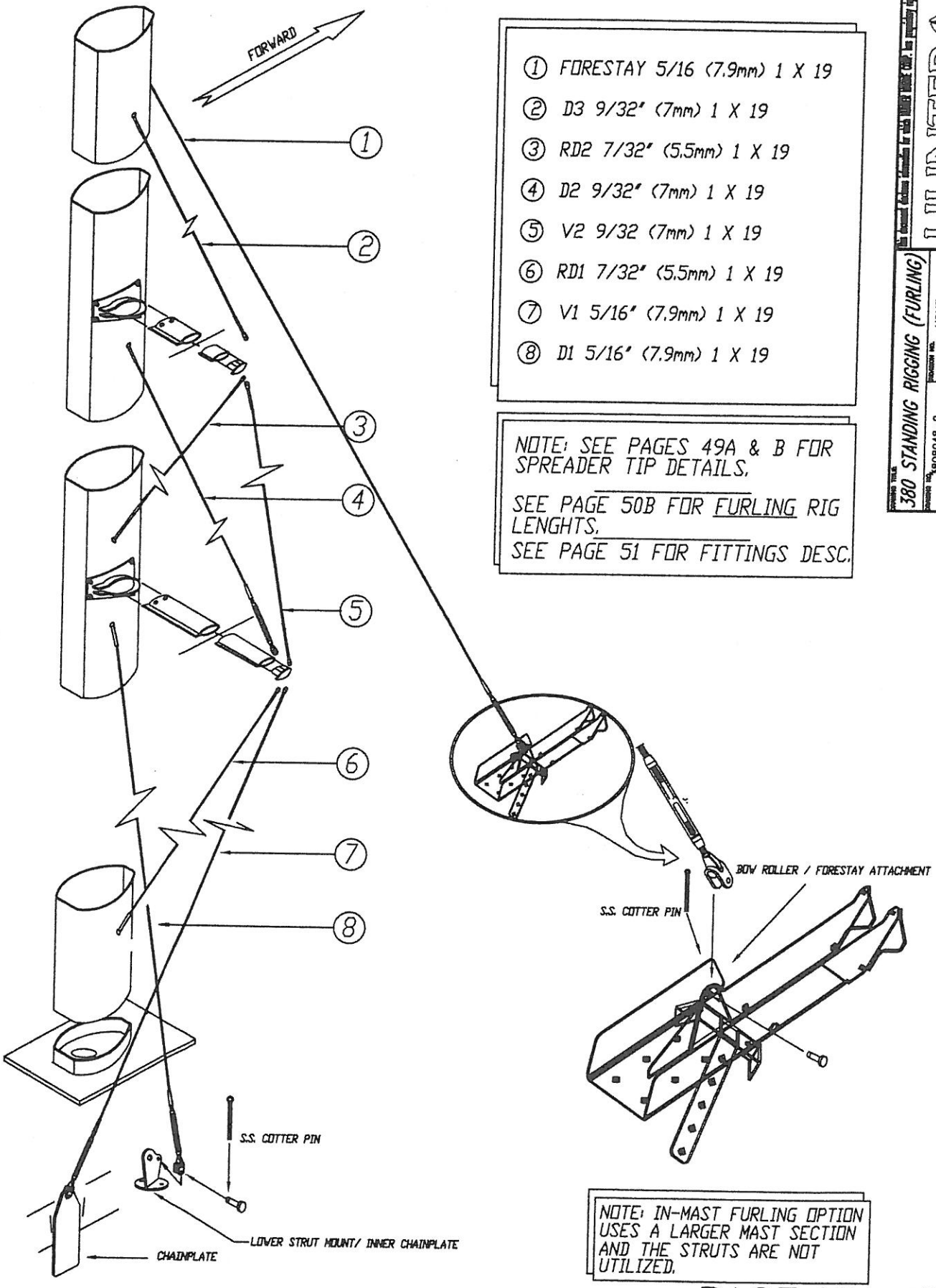


① FORESTAY 5/16 (7.9mm) 1 X 19

② D3 9/32" (7mm) 1 X 19

③ RD2 7/32" (5.5mm) 1 X 19

④ D2 9/32" (7mm) 1 X 19

⑤ V2 9/32 (7mm) 1 X 19

⑥ RD1 7/32" (5.5mm) 1 X 19

⑦ V1 5/16" (7.9mm) 1 X 19

⑧ D1 5/16" (7.9mm) 1 X 19

NOTE: SEE PAGES 49A & B FOR SPREADER TIP DETAILS.

SEE PAGE 50B FOR FURLING RIG LENGHTS.

SEE PAGE 51 FOR FITTINGS DESC.

NOTE: IN-MAST FURLING OPTION USES A LARGER MAST SECTION AND THE STRUTS ARE NOT UTILIZED.

HUNTER

DRAWING TITLE: 380 STANDING RIGGING (FURLING)

DRAWING NO. 3608048-2

DRAWN BY: ENGINEERING DEPT.

REVISION NO. NONE

DATE: 6/24/97

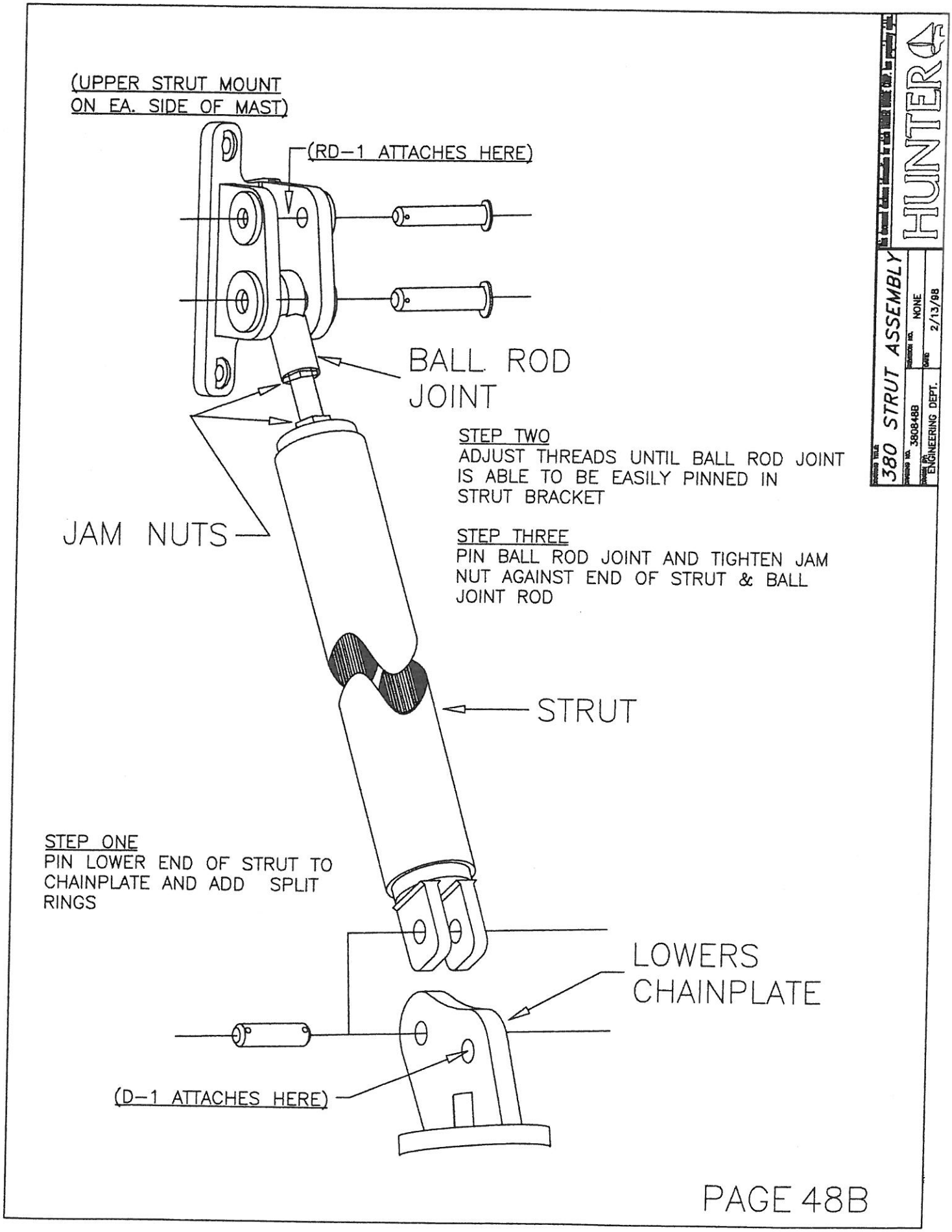
(UPPER STRUT MOUNT
ON EA. SIDE OF MAST)
(RD-1 ATTACHES HERE)
BALL ROD
JOINT
JAM NUTS
STEP TWO
ADJUST THREADS UNTIL BALL ROD JOINT IS ABLE TO BE EASILY PINNED IN STRUT BRACKET
STEP THREE
PIN BALL ROD JOINT AND TIGHTEN JAM NUT AGAINST END OF STRUT & BALL JOINT ROD
STRUT
STEP ONE
PIN LOWER END OF STRUT TO CHAINPLATE AND ADD SPLIT RINGS
LOWERS
CHAINPLATE
(D-1 ATTACHES HERE)
HUNTER
380 STRUT ASSEMBLY
380848B
NONE
ENGINEERING DEPT.
2/13/98

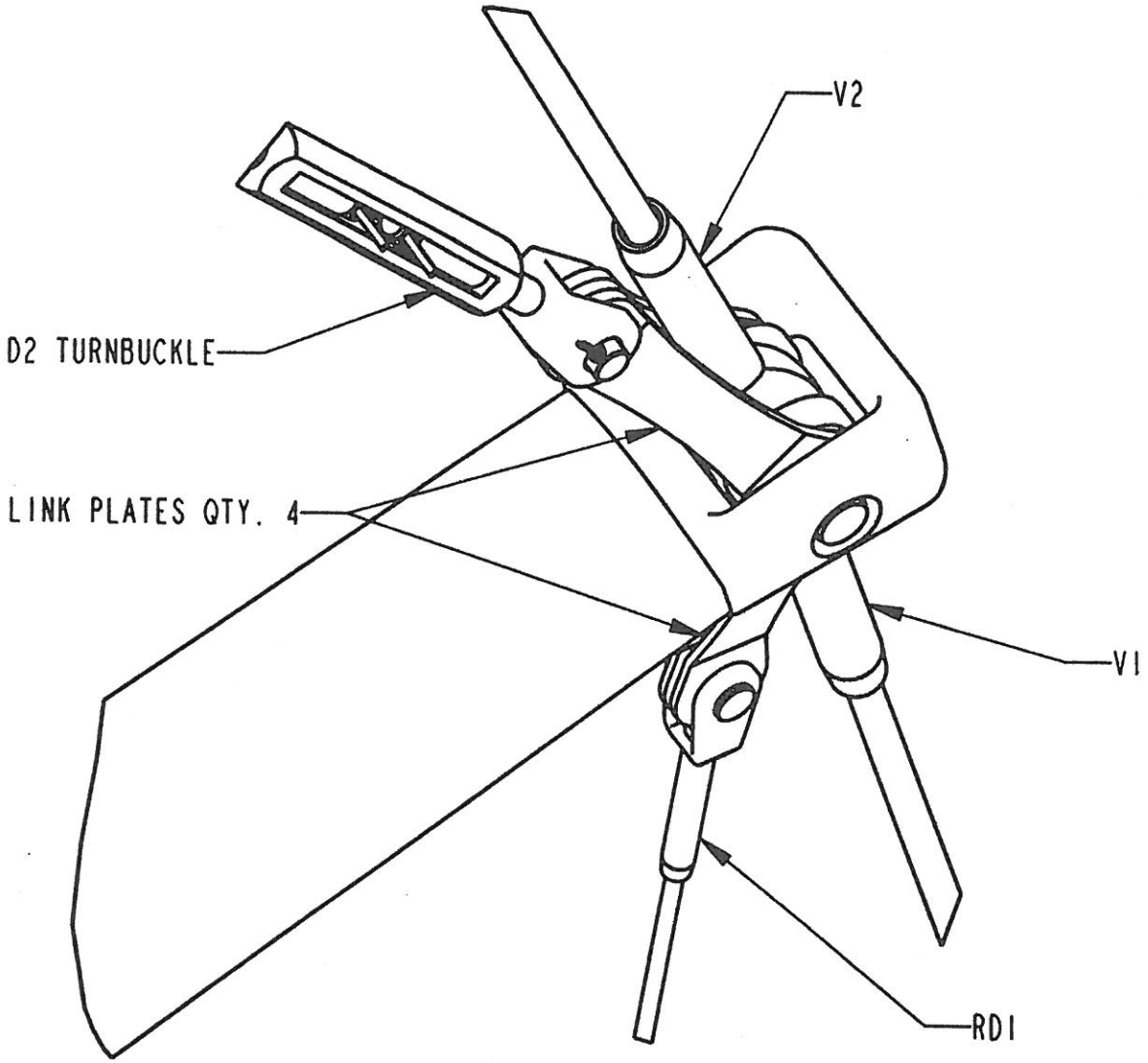


(drawing) title:
SELDEN MAST LOWER SPREADER TIP

(drawing) no.
U

revision no.
initial

(drawn by:
[illegible]

date:
[illegible]

This document displays information for which [illegible] has proprietary rights.

HUNTER

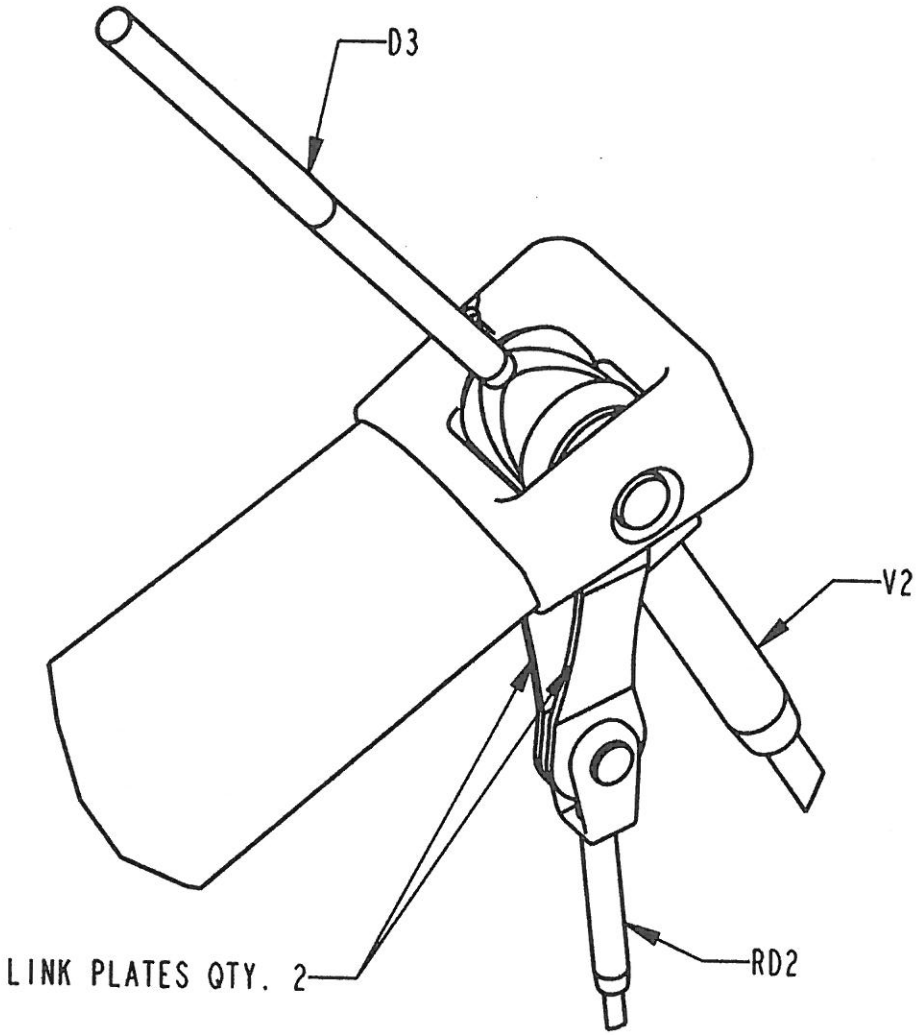


DRAWING TITLE:
SELDEN MAST UPPER SPREADER TIP

DRAWING NO.
8

REVISION NO.
initial

DRAWN BY:
Embuildings ltd

DATE:
09-Jul-99

This document discloses information for which HUNTER MARINE GROUP, has proprietary rights.

HUNTER

## h380 SELDEN STANDARD STANDING RIGGING SPECIFICATIONS

BY: KJC | DATE: **7-May-98** | **REVISION:**

| | OPT/STD | ITEM | QUANTITY | WIRE SIZE | UPPER END | LENGTH | | LOWER END |
|---|---|---|---|---|---|---|---|---|
| 1 | STD | D3 | 2 | 9/32" (7mm) 1x19 | 840 SERIES GIBB TANG | 3.880 m | 12 ft. 8 3/4 in. | ME |
| 2 | STD | V2 | 2 | 9/32" (7mm) 1x19 | TOGGLE JAW | 3.969 m | 13 ft. 1/4 in. | ME |
| 1 | STD | D2 | 2 | 7/32" (5.5mm) 1x19 | 840 SERIES GIBB TANG | 3.759 m | 12 ft. 4 in. | TURNBUCKLE WITH JAW TOGGLE 3/8" PINS |
| 2 | STD | V1 | 2 | 5/16" (8mm) 1x19 | TOGGLE JAW | 6.934 m | 22 ft. 9 in. | 10-20-20 TURNBUCKLE |
| 3 | STD | D1 | 2 | 5/16" (8mm) 1x19 | 840 SERIES GIBB TANG | 6.521 m | 21 ft. 4 3/4 in. | 10-16-16 TURNBUCKLE |
| 3 | STD | UPPER DIAMOND, RD2 | 2 | 3/16" (4.75mm) 1X19 | TOGGLE JAW WITH 10mm PIN | 3.994 m | 13 ft. 1 1/4 in. | TURNBUCKLE WITH 740 SERIES GIBB TANG |
| 4 | STD | LOWER DIAMOND, RD1 | 2 | 3/16" (4.75mm) 1X19 | TOGGLE JAW WITH 10mm PIN | 4.782 m | 15 ft. 8 1/4 in. | TURNBUCKLE WITH EYE FOR 3/8" PIN |
| 5 | STD | FORESTAY | 1 | 5/16" (8mm) 1x19 | ME ***1/8" CHAMFER BOTH SIDES*** | 15.011 m | 49 ft. 3 in. | GIBB 10-16-16 TURNBUCKLE W/ JAW TOGGLE LOOSE |

ALL ADJUSTABLE RIGGING IS DIMENSIONED WITH TURNBUCKLES 2/3 OPEN
ALL TURNBUCKLES TO HAVE RIGHT HAND THREADS ON SWAGED FITTING
LENGTHS HAVE 110mm DEDUCTED FOR LINK PLATES ON D2 AND RD1, RD2



DRAWING TITLE: 380 STANDING RIG SPECS (STD)
DRAWING NO. 3808050A | REVISION NO. NONE
DRAWN BY: ENGINEERING DEPT. | DATE: 2/13/98

This document declares information for which HUNTER MARINE CORP. has proprietary rights.

HUNTER

## h380 SELDEN FURLING STANDING RIGGING SPECIFICATIONS

BY: KJC DATE: 4-May-98 **REVISION:**

| | OPT/STD | ITEM | QUANTITY | WIRE SIZE | UPPER END | LENGTH | | LOWER END |
|---|---|---|---|---|---|---|---|---|
| 1 | STD | D3 | 2 | 9/32" (7mm) 1x19 | 840 SERIES GIBB TANG | 4.547 m | 14 ft. 11 in. | ME |
| 2 | STD | V2 | 2 | 9/32" (7mm) 1x19 | TOGGLE JAW | 4.636 m | 15 ft. 2 1/2 in. | ME |
| 1 | STD | D2 | 2 | 9/32" (7mm) 1x19 | 840 SERIES GIBB TANG | 4.572 m | 15 ft. 0 in. | TURNBUCKLE WITH 3/8" PINS |
| 2 | STD | V1 | 2 | 5/16" (8mm) 1x19 | TOGGLE JAW | 7.620 m | 25 ft. 0 in. | 10-20-20 TURNBUCKLE |
| 3 | STD | D1 | 2 | 5/16" (8mm) 1x19 | 840 SERIES GIBB TANG | 7.620 m | 25 ft. 0 in. | 10-16-16 TURNBUCKLE |
| 3 | STD | UPPER DIAMOND, RD2 | 2 | 7/32" (5.5mm) 1X19 | TOGGLE JAW WITH 10mm PIN | 4.877 m | 16 ft. 0 in. | TURNBUCKLE WITH 740 SERIES GIBB TANG |
| 4 | STD | LOWER DIAMOND, RD1 | 2 | 7/32" (5.5mm) 1X19 | TOGGLE JAW WITH 10mm PIN | 4.877 m | 16 ft. 0 in. | UPSET EYE TOGGLE FOR 3/8" PIN ON STRUT BRACKET |
| 5 | STD | FORESTAY | 1 | 5/16" (8mm) 1x19 | ME | 15.240 m | 50 ft. 0 in. | GIBB 10-16-16 TURNBUCKLE W/ JAW TOGGLE LOOSE |

incorrect

ALL ADJUSTABLE RIGGING IS DIMENSIONED WITH TURNBUCKLES 2/3 OPEN
ALL TURNBUCKLES TO HAVE RIGHT HAND THREADS ON SWAGED FITTING

PAGE 50B

| | |
|---|---|
| DRAWING TITLE: 380 STANDING RIGGING SPECIFICATIONS (FURL) | This document discloses information for which HUNTER MARINE CORP. has proprietary rights. |
| DRAWING NO. 3808050B / SCALE NONE | HUNTER |
| DRAWN BY ENGINEERING DEPT / DATE 6/29/98 | |

NOTE: SEE PAGES 50A & 50B FOR ACTUAL RIG LENGHTS.

V = VERTICAL
D = DIAGONAL
RD = REVERSE DIAGONAL

1 = LOWER
2 = INTER.
3 = UPPER

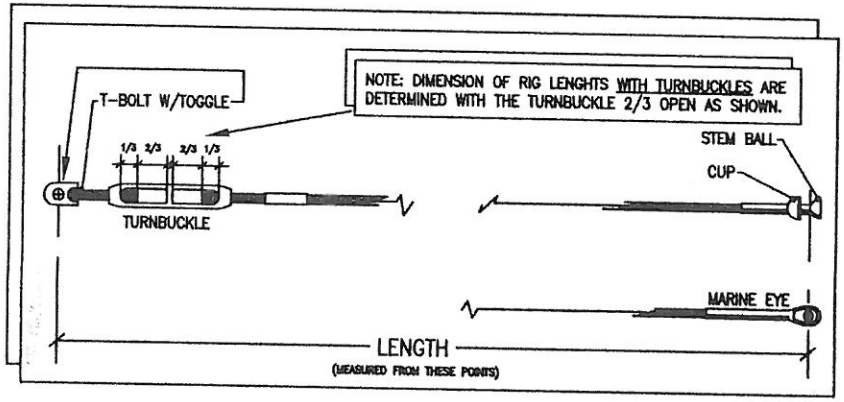


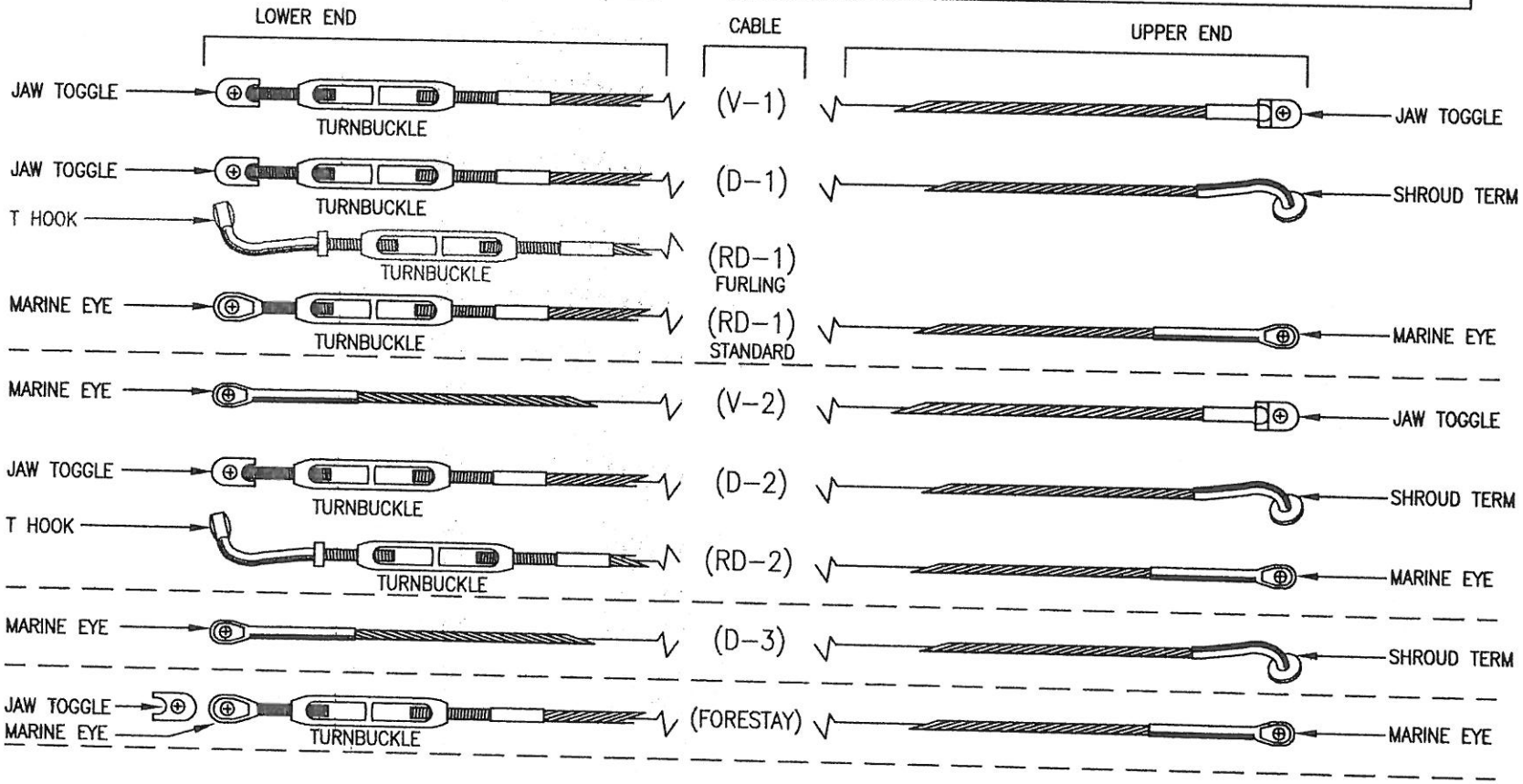


| | |
|---|---|
| DRAWING TITLE: 380 RIGGING LENGHTS DETAIL | |
| DRAWING NO. 3800851 | REVISION NO. NONE |
| DRAWN BY: ENGINEERING DEPT | DATE 2/13/98 |

This document discloses information for which HUNTER MARINE CORP. has proprietary rights.

HUNTER

# TUNING THE 380 B&R RIG

The easiest method for tuning the B&R rig is to perform step one as follows before the mast is stepped, with it lying aft side down on two sawhorses. Begin with all rigging slack. If the mast is already stepped, loosen all the rigging, and then proceed to step one.

1. Start with all the rigging slack. Then induce the mast bend by tightening the reverse diagonals (diamonds). Measure the bend by tensioning a line or the main halyard between the masthead and the gooseneck. The maximum amount of bend should be no more than 8" (203 mm)for the standard rig and no more than 2" (50 mm) for the furling mast measured perpendicular from the aft face of the mast to the halyard at the deepest part of the bend. It can be less than that based on the sail shape and your own preference. The bend should also be evenly distributed along the mast to give a smooth shape. Keep in mind that bending a furling mast may make it more difficult to furl and will not do much to flatten the sail as in a standard rig. It is very important that the mast also be straight from side to side at this time. Tighten or loosen the reverse diagonals to achieve this.

2. Step the mast with all shrouds attached but with the turnbuckles completely loosened (if the mast was not already stepped).

3. Attach the jib halyard to a cleat on the bow to support the mast in a raked position (the masthead should be about 2-1/2' behind the step). Attach the verticals and tighten them until you can just see the hole for the cotter pin in the turnbuckle. Tighten the jib halyard until you can attach the forestay. At this point the masthead should be raked so that a weight hung on the main halyard hangs about 1' behind the mast step.

4. Use the main halyard to check that the mast is centered from side to side. Pull it tight and mark the halyard next to the verticals chainplate. Now do the same to the other side to see if the marks line up. If not, tighten and/or loosen the verticals until the marks line up. Once the masthead is centered, begin tightening the verticals until the turnbuckles are approximately half closed. While tightening the verticals you may notice the bend in the mast increasing. Now you can tighten the lowers which will tend to straighten the lower part of the mast. Be sure to tighten port and starboard sides evenly.

5. Now you should tighten the headstay until it is approximately half closed as well. This should induce the appropriate amount of headstay tension. *Never* use anything more than a pair of wrenches to tighten your rigging. If you use an extended piece of pipe on the handle of a wrench you can over tighten the rigging and do damage to the mast or rigging.

6. On the Hunter 380 it is necessary to go up the mast in a bosun's chair to tighten the number 2 diagonal shroud (D2 or intermediate shroud). Always use caution when "going aloft". You should always use a mountain climbing harness or Bosun's Chair intended for this use. Always tie into the harness with the halyard using a bowline and then secure the shackle as a back up as the knot is more reliable than a mechanical fastener. The person hoisting you aloft should keep the halyard stopper closed to prevent falls. Good communication between the two of you is also important. Tighten the D2 until it has just become tight and then add two complete turns. While at the first spreader, look up the back of the mast to see if it is straight. If not then adjust the appropriate D2 to straighten it.

7. Have the person on deck carefully lower you. They should keep the halyard wrapped at least twice around the winch and should always have one hand able to stop the halyard from running free. Once on deck look up the back of the mast and see if it is straight. if not then adjust the lowers (D1) until it is.

8. If you have the standard rig you need to attach the struts at this time. Attach the lower end of the strut to the smaller hole in the chainplate. Adjust the length by turning the ball joint bearing in the upper end of the

strut until the holes in the pin can be attached. It is normal to have some play between the strut and the chainplate and strut bracket

9. The final test is to go sailing in 10-15 knots of wind. First, adjust the tension in the shrouds. If when sailing upwind, the shrouds on the leeward side are slack then tighten them to remove about half the slack keeping note of the number of turns. Then tack and do the same to the other side. Do this until you are happy with the tension and the leeward side does not get loose when the boat is heeled. Now sight up the mast to be sure it is still relatively straight from side to side. If it is not then adjust to appropriate rigging to correct it. For example: if the mast is straight until the upper spreader and then hooks to the windward side then you will have to revisit steps 6 and 7 above. Remember to always tighten the leeward shroud, tack and tighten the new leeward shroud the same amount. This prevents damage to the turnbuckles and is also much easier to do. Keep in mind it is also possible to have something too tight such as a diagonal shroud.

10. At this point you should have adequate headstay tension. The sails are built for about 14" of headstay sag, the bend in the standard mast should be about 1' and 4" in the furling mast and it should be nearly straight from side to side when sailing upwind. If any of these are not true then revisit the appropriate step above to correct it. If the sag in the headstay is too much then adding tension to the verticals will fix it.

11. Once the rig is tuned you should make sure to add the cotter pins to all the rigging bending back the ends and taping them to prevent snagged lines sails and fingers.

Remember that rigging, like everything else, can age. As it gets older it may need to be replaced. The frequency for which this becomes necessary depends on the climate and conditions in which the boat is sailed. For example: if you sail in the Caribbean it should be replaced every 2-3 years compared to every 10 for the great lakes. You should consult a professional rigger for advice.

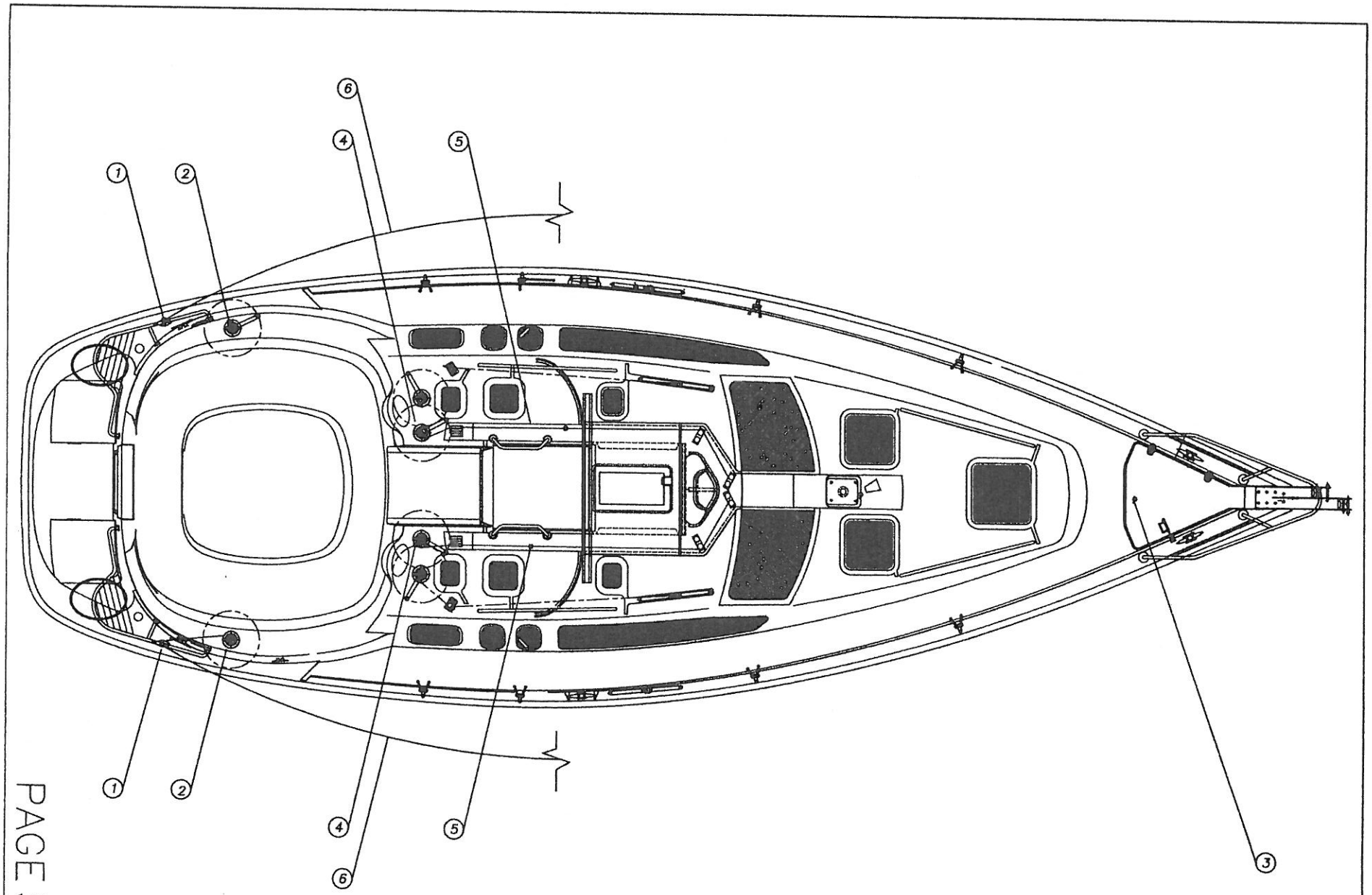


| | |
|---|---|
| DRAWING TITLE: 380 OPTIONAL HRDWR/SPINNAKER LAYOUT | This document declares information for which HUNTER MARINE CORP. has proprietary rights. |
| DRAWING NO. 3808054A | REVISION NO. NONE |
| DRAWN BY ENGINEERING DEPT. | DATE 2/13/98 |

HUNTER

## 380 OPTIONAL DECK GEAR

| # | QTY | OPTIONAL DECK HARDWARE | MFG # | HUN# |
|---|---|---|---|---|
| | | | | |
| 1 | 2 | SPINNAKER BLOCKS | 504-09 | 999999 |
| 2 | 2 | SPINNAKER WINCHES LEWMAR | 40CST | HW2520 |
| 3 | 1 | WINDLASS | ANCHORMAN 800 | - |
| 4 | 1 | ELECTRIC HALYARD WINCH | 44CEST | HW2569 |
| 5 | 1 | SPINNAKER HALYARD | SEE RUNNING RIGGING SHEETS | |
| 6 | 2 | SPINNAKER SHEET | SEE RUNNING RIGGING SHEETS | |



| | | |
|---|---|---|
| DRAWING TITLE: 380 OPTIONAL DECK HARDWARE LIST | | This document discloses information for which HUNTER MARINE CORP. has proprietary rights. |
| DRAWING NO. 3808054B | REVISION NO. NONE | HUNTER |
| DRAWN BY ENGINEERING DEPT | DATE 2/13/98 | |

# ENGINE OPERATING INSTRUCTIONS:

1. FILL DIESEL TANK WITH DIESEL FUEL
2. CHECK ENGINE OIL LEVEL (SEE YANMAR MANUAL)
3. OPEN ENGINE RAW WATER PICKUP SEACOCK (SEE PAGE 60)
4. TURN ON "START BATTERY SELECTOR SWITCH" (LOCATED AT NAV. STATION)
5. TURN KEY TO START POSITION, RELEASE WHEN ENGINE STARTS
   NOTE" IF ENGINE APPEARS TO HAVE TROUBLE STARTING, SEE YANMAR MANUAL
6. TO SHUT ENGINE DOWN: PUSH RED BUTTON AT KEY SWITCH PANEL
   UNTIL ENGINE STOPS RUNNING THEN TURN KEY TO OFF POSITION.

* WARNING: DO NOT LEAVE AFT HATCHES OPEN WHILE ENGINE IS RUNNING. THERE EXISTS A POSSIBILITY OF EXHAUST POISIONING, OR EVEN DEATH.

THIS PAGE UPDATED AS OF 9/21/98



| | | |
|---|---|---|
| DRAWING TITLE: 380 ENGINE OPER. INST | | This document discloses information for which HUNTER MARINE CORP. has proprietary rights. |
| DRAWING NO. 3808055A | REVISION NO. NONE | HUNTER |
| DRAWN BY: ENGINEERING DEPT. | DATE: 7/26/97 | |

# ENGINE OPERATING INSTRUCTIONS:

① FILL DIESEL TANK WITH DIESEL FUEL
② CHECK ENGINE OIL LEVEL (SEE YANMAR MANUAL)
③ OPEN ENGINE RAW WATER PICKUP SEACOCK (SEE PAGE 60)
④ TURN ON "START BATTERY SELECTOR SWITCH" (LOCATED AT NAV. STATION)
⑥ PUSH PRE-HEAT BUTTON (SEE YANMAR MANUAL FOR SPECIFIED TIME)
⑦ TURN KEY TO START POSITION, RELEASE WHEN ENGINE STARTS
NOTE" IF ENGINE APPEARS TO HAVE TROUBLE STARTING, SEE YANMAR MANUAL
⑧ TO SHUT ENGINE DOWN: PUSH RED BUTTON AT KEY SWITCH PANEL
UNTIL ENGINE STOPS RUNNING THEN TURN KEY TO OFF POSITION.



| DRAWING TITLE: 380 ENGINE OPER. INST | | |
|---|---|---|
| DRAWING NO. 3808055A | REVISION NO. NONE | |

This document discloses information for which HUNTER MARINE CORP. has proprietary rights.

HUNTER

# SYSTEMS SCHEMATIC

- ENGINE
  - WATER INTAKE
  - EXHAUST
  - FUEL SYSTEM
    - FEED
    - RETURN
    - TANK
    - FILTER
    - VALVE @ TANK
  - THRU-HULL
  - SEA COCK
  - STRAINER
  - ELBO
  - HOSE
  - MUFFLER
- RUNNING GEAR
  - SHAFT
  - COUPLING
  - STUFFING BOX
- CONTROLS
  - SHIFT
  - THROTTLE
  - PANEL HARNESS
- ELECTRICAL SYSTEM
  - BATT SW
  - STARTING BATTERY
  - HOUSE BATTERY(S)
    - INVERTER/CHARGER
    - 12V SYSTEM
    - 110V SYSTEM
    - SHORE POWER
- OPTIONAL GENSET

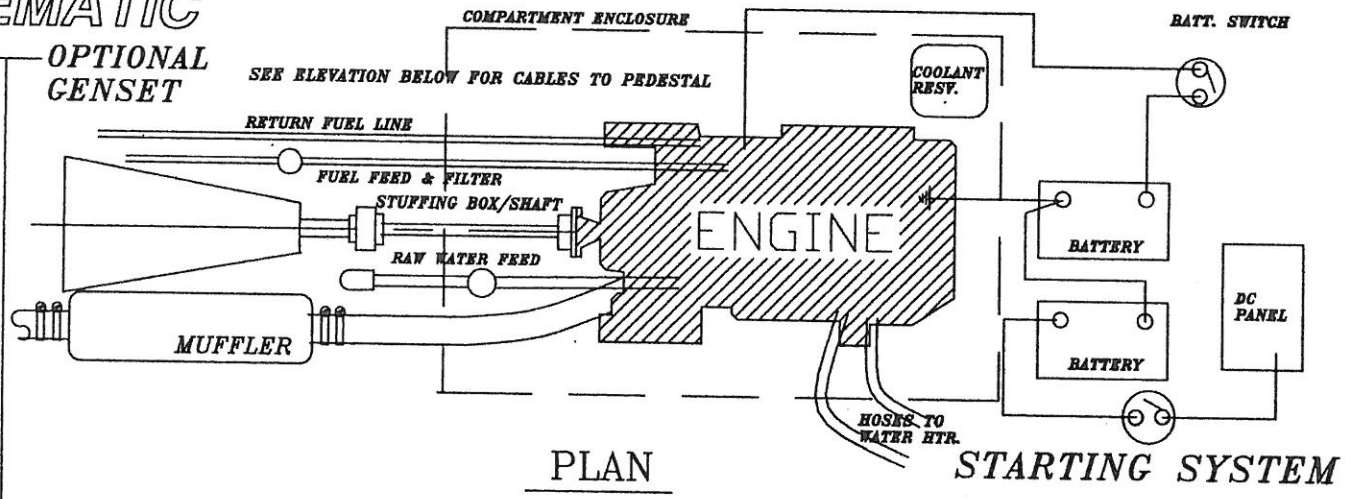


PLAN

STARTING SYSTEM

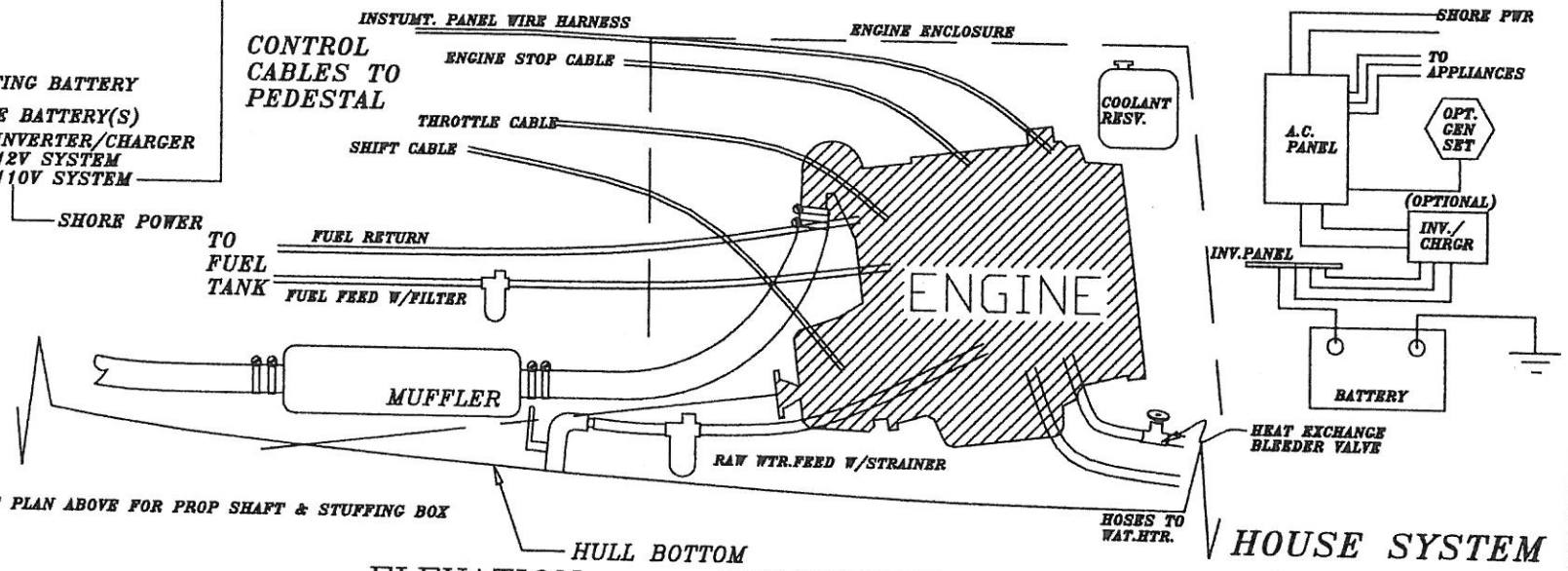


ELEVATION

HOUSE SYSTEM

NOTE: THIS DWG. IS SCHEMATIC FORM SEE SPECIFIC SYSTEM DWGS. FOR BATTERIES/SWITCHES/ CHARGER ETC. LOCATIONS AND WIRE RUNS.

| | |
|---|---|
| DRAWING TITLE: 380 ENGINE COMPARTMENT LAYOUT | This document discloses information for which HUNTER MARINE CORP. has proprietary rights. |
| DRAWING NO. 3808055B | REVISION NO. NONE |
| DRAWN BY: ENGINEERING DEPT. | DATE: |

HUNTER

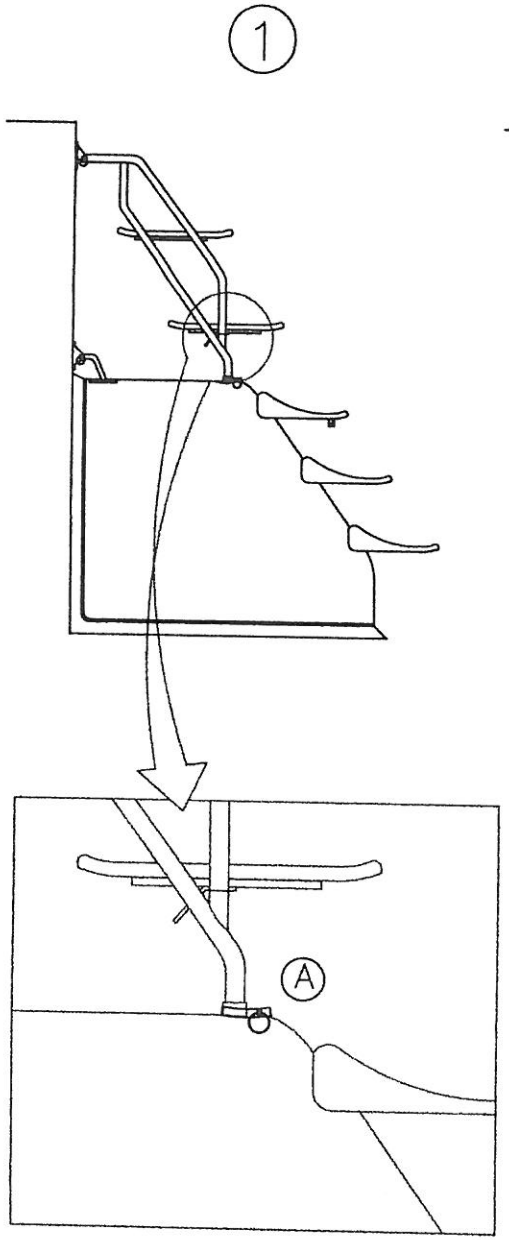


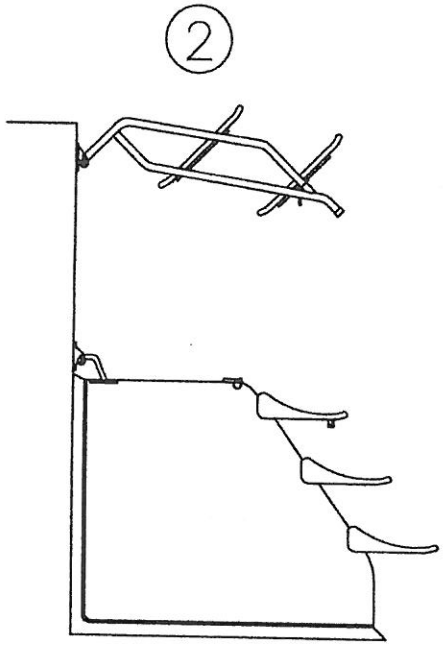


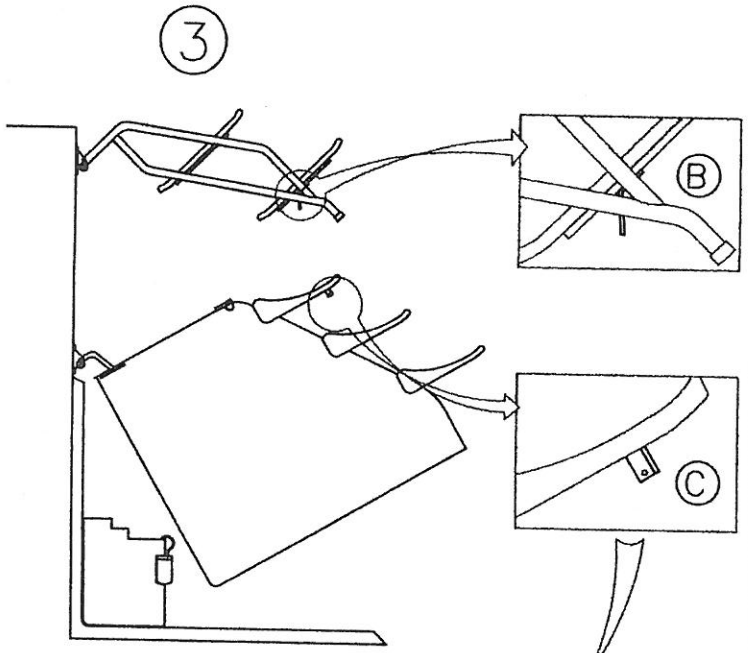


1. REMOVE QUICK PIN (A) FROM FOOT OF COMPANIONWAY LADDER

2. ROTATE COMPANIONWAY LADDER UPWARDS AS SHOWN

3. ROTATE ENGINE BOX COVER UPWARDS AS SHOWN. LOCK TANGS (C) INTO (B) AND INSTALL QUICK PIN (D)

NOTE: ALWAYS REMEMBER TO REINSTALL QUICK PINS AFTER CLOSING. AND NEVER WORK UNDER AN OPEN ENGINE BOX COVER UNLESS QUICK PIN (D) IS ENGAGED

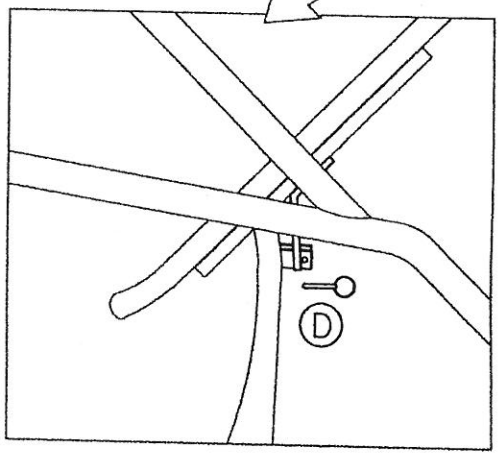


| | | |
|---|---|---|
| DRAWING TITLE: 380 ENGINE BOX OPENING INSTRUCTIONS | | This document discloses information for which HUNTER MARINE CORP. has proprietary rights. |
| DRAWING NO. 3808055C | REVISION NO. NONE | HUNTER |
| DRAWN BY: ENGINEERING DEPT. | DATE: 4/16/98 | |

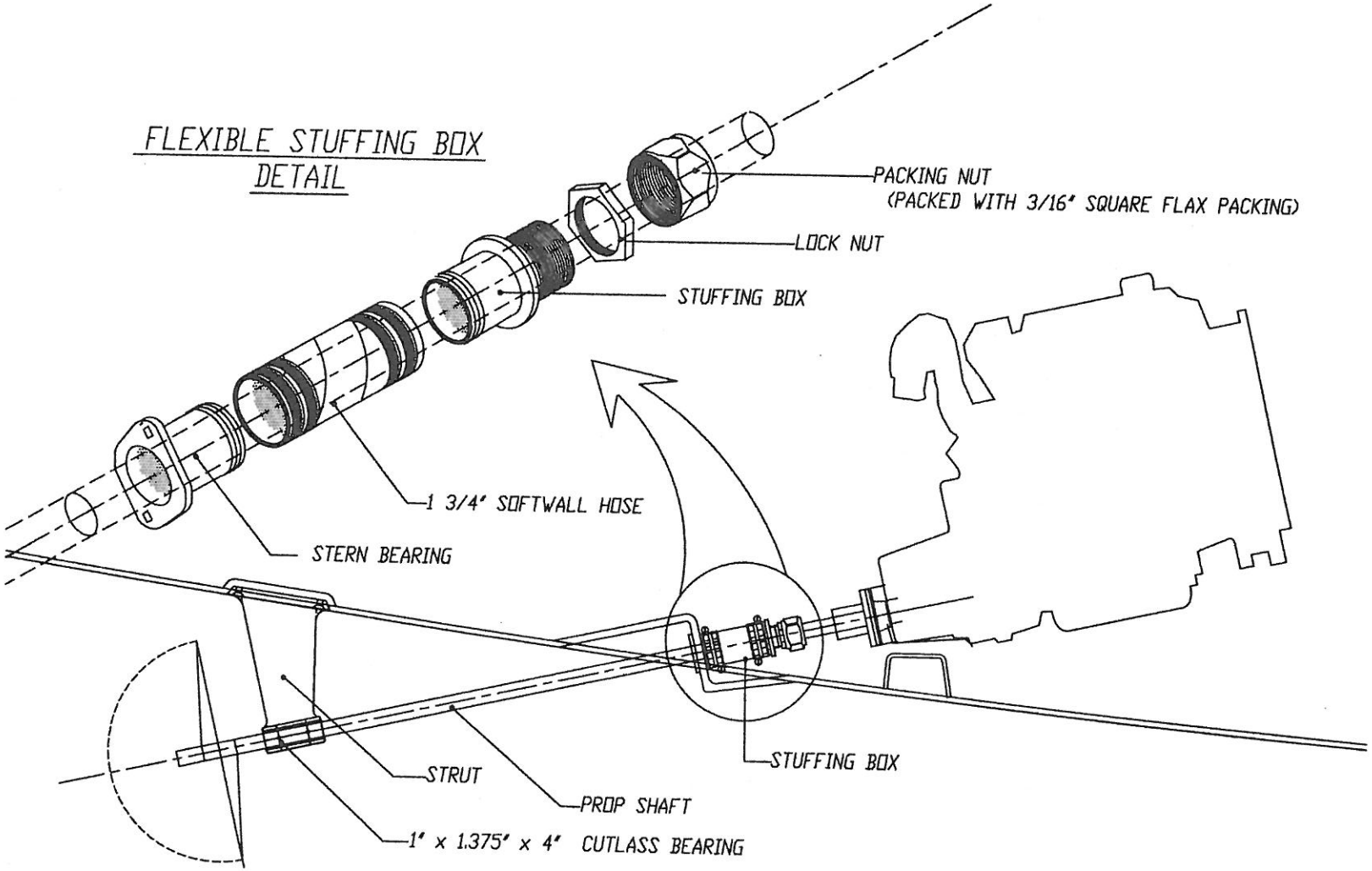


| | |
|---|---|
| DRAWING TITLE: 380 STUFFING BOX DETAIL | This document discloses information for which HUNTER MARINE CORP. has proprietary rights. |
| DRAWING NO. 3808056 | REVISION NO. NONE |
| DRAWN BY: ENGINEERING DEPT. | DATE: 2/17/98 |

HUNTER

## FRESH WATER SYSTEM OPERATION:

1. FILL TANK WITH FRESH WATER (SEE PAGE 60B FOR FILL LOCATION)
2. OPEN ON/OFF VALVE (SEE PAGE 57C FOR VALVE LOCATION)
3. TURN HOUSE BATTERY SELECTOR SWITCH TO THE "ON" POSITION
4. TURN ON "D.C. MAIN" BREAKER ON MAIN BREAKER PANEL
5. TURN ON "WATER PRESSURE" BREAKER ON MAIN BREAKER PANEL
6. "HOT WATER" IS ATTAINABLE BASICALLY IN TWO WAYS...
   - A. BY HEATING THE WATER THRU THE DIESEL ENGINE
   - B. BY SUPPLYING 110V.A.C. BY "DOCKSIDE SHORE POWER" OR GENERATOR POWER
7. TO HEAT BY "ENGINE" SEE PAGE 55A FOR ENGINE OPERATING INST.

NOTE: WHEN COOLANT IS INSTALLED, BLEED AIR FROM HEAT EXCHANGER LINES TO WATER HEATER. CRANK ENGINE, OPEN BLEEDER VALVE (SEE PAGE 55B) UNTIL AIR IS GONE FROM LINES

8. TO HEAT BY "SHORE POWER"
   - A. HOOK UP SHORE POWER CABLE/S
   - B. TURN ON A.C. MAIN BREAKER ON MAIN BREAKER PANEL
   - C. TURN ON "WATER HEATER BREAKER" ON MAIN BREAKER PANEL
9. TO HEAT BY "OPT. GENERATOR POWER"... SEE PAGE 63E-1 FOR GEN. OPER. INST. THEN FOLLOW STEPS #1-#6 & #8 B,C ABOVE.

NOTE: AS WITH ALL WATER HEATERS, BE SURE WATER TANK IS FULL BEFORE APPLYING POWER TO UNIT, TO AVOID DAMAGE TO HEATING ELEMENT



| | |
|---|---|
| DRAWING TITLE: 380 FRESH WATER OPERATING INST. | |
| DRAWING NO. 3808057A | REVISION NO. NONE |
| DRAWN BY ENGINEERING DEPT | DATE 2/17/98 |

This document discloses information for which HUNTER MARINE CORP. has proprietary rights.

HUNTER

THIS PAGE UPDATED AS OF 1-12-99 HULL #549

AFT HEAD (SEE PAGE 57F)

5A AFT SHOWER HEAD
5B AFT VANITY SEACOCK
5C AFT VANITY FAUCET

HOT WATER QUEST LINES

COLD WATER QUEST LINES

SUMP BOX COMPONENTS (SEE PAGE 57E)

6A AFT SHOWER DRAIN
6B GALLEY ICEBOX DRAIN
6C SUMP PUMP BOX
6D SUMP PUMP DISCHARGE (HULL FITTING) 3/4" (19.1mm) SEACOCK

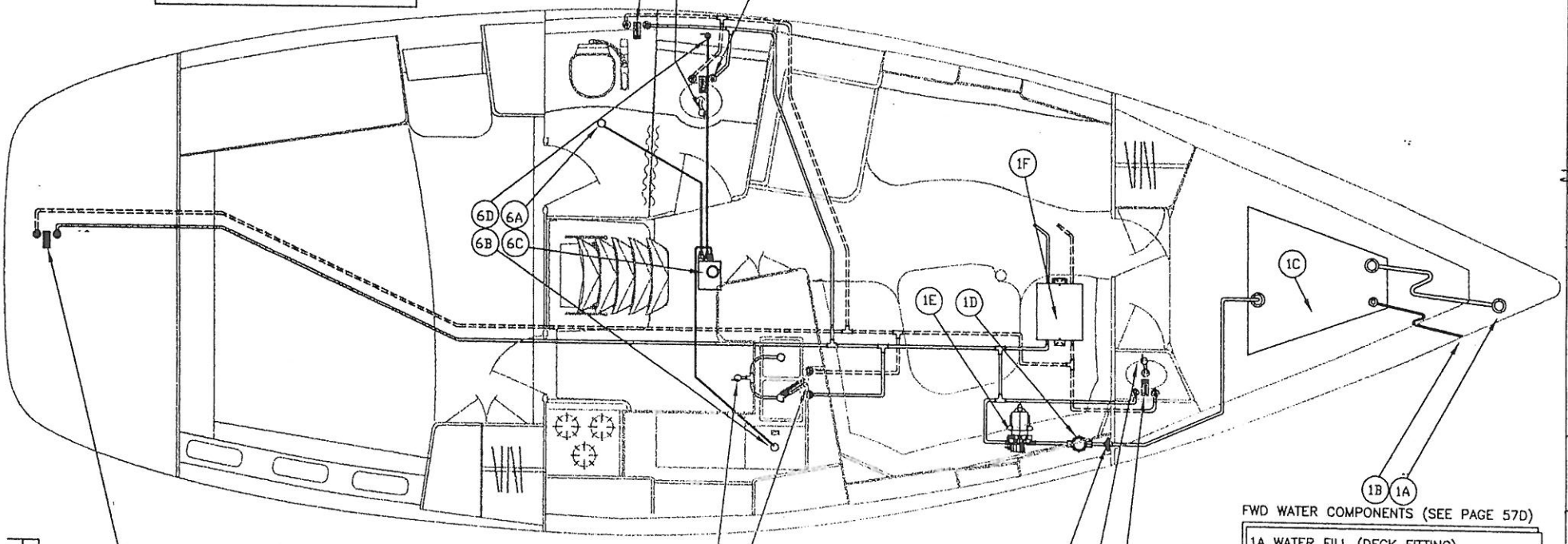


FWD WATER COMPONENTS (SEE PAGE 57D)

1A WATER FILL (DECK FITTING)
1B WATER VENT (HULL FITTING
1C WATER TANK (75 GAL. 280 L)
1D WATER FILTER
1E WATER PUMP
1F WATER HEATER (6 GAL. 23L.)

AFT COCKPIT SHOWER (SEE PAGE 57G)

4A COCKPIT SHOWER

GALLEY (SEE PAGE 57E)

3A GALLEY FAUCET
3B GALLEY SEACOCK

FWD VANITY (SEE PAGE 57D)

2A VANITY FAUCET
2B VANITY SEACOCK
2C FRESH WATER ON/OFF VALVE

| 380 FRESH WATER SYSTEM DRAIN LAYOUT | |
|---|---|
| 3808057B | NONE |
| ENGINEERING DEPT | 6/17/98 |

This document discloses information for which HUNTER MARINE CORP. has proprietary rights.

HUNTER

1A FILL HOSE (TO DECK FITTING)
1 1/2" SHELDVAC HOSE (38.1 mm)
2A VENT HOSE (TO HULL FITTING)
3/4" SHELDVAC HOSE (19.1 mm)
3A FWD WATER TANK
4A WATER FILTER
5A 12 V.D.C. WATER PUMP
6A WATER HEATER
7A HEAT EXCHANGER LINES TO ENGINE
1B HOT WATER TO FWD VANITY SINK
2B COLD WATER TO FWD VANITY SINK
3B FWD VANITY SEACOCK
1C HOT WATER TO GALLEY SINK
2C COLD WATER TO GALLEY SINK
3C GALLEY SEACOCK
1D SUMP PUMP
2D FREEZER DRAIN TO SUMP PUMP
3D SUMP PUMP DISCHARGE TO HULL FITTING THRU HULL SEACOCK 3/4" (19.1mm)
4D AFT SHOWER DRAIN TO SUMP PUMP
1E HOT WATER TO COCKPIT SHOWER
2E COLD WATER TO COCKPIT SHOWER
1F HOT WATER TO SHOWER
2F COLD WATER TO SHOWER
3F AFT VANITY SEACOCK
1G HOT WATER TO AFT VANITY SINK
2G COLD WATER TO AFT VANITY SINK

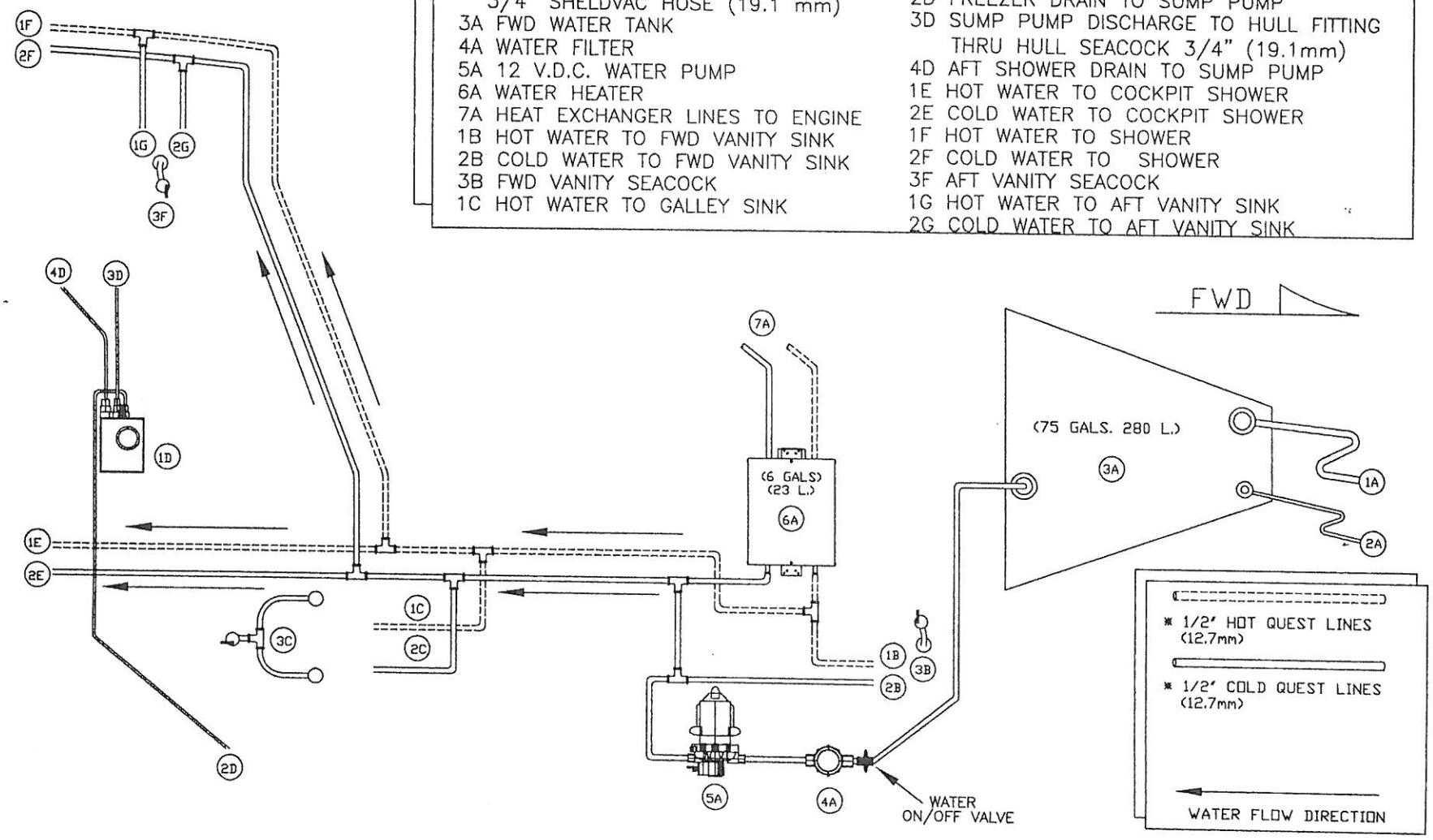


| 380 FRESH WATER (BASIC LAYOUT) | |
|---|---|
| 3808057C | NONE |
| ENGINEERING DEPT. | 2/17/98 |

This document discloses information for which HUNTER MARINE CORP. has proprietary rights.

HUNTER

THIS PAGE UPDATED AS OF HULL #544 1-12-99

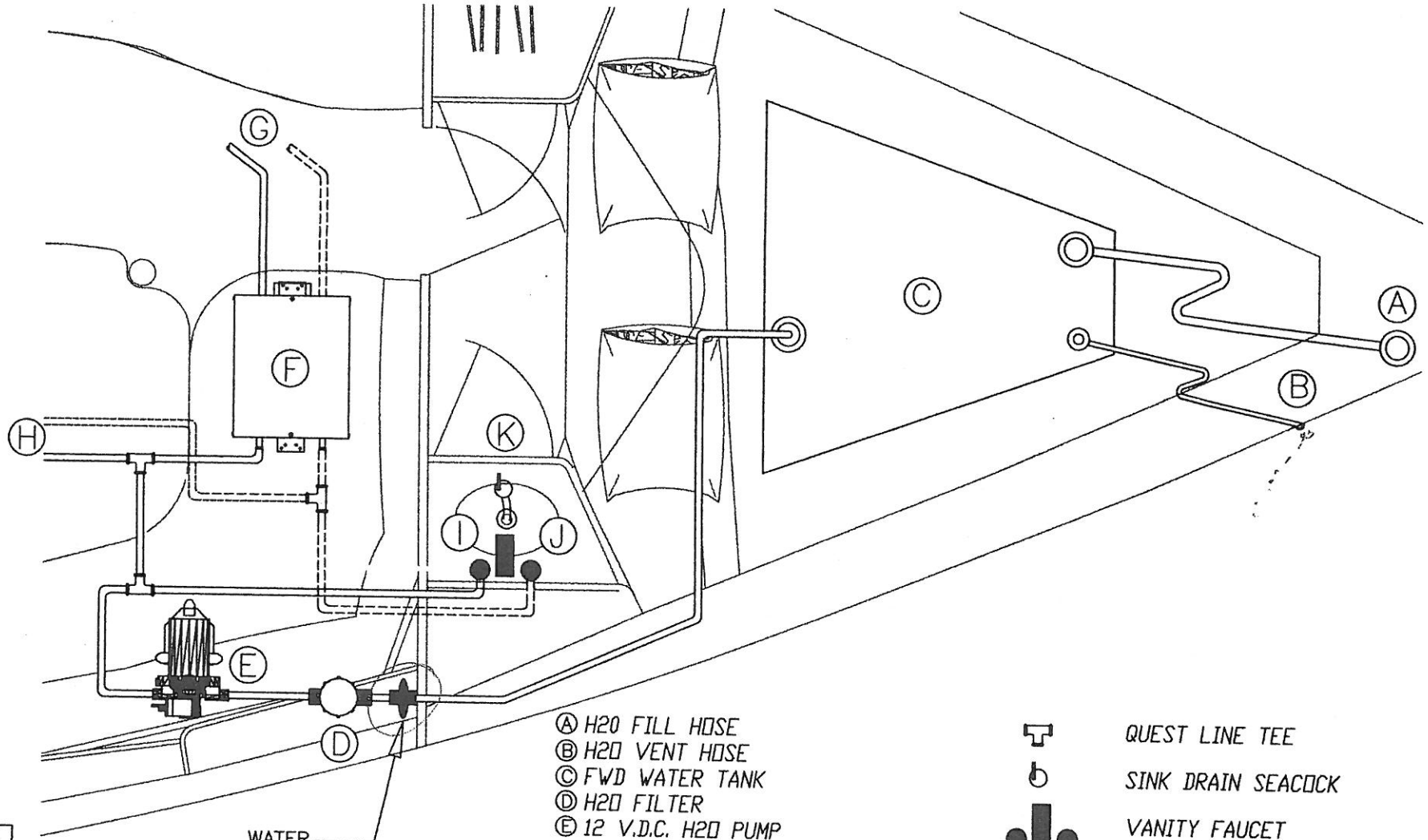


Ⓐ H20 FILL HOSE
Ⓑ H20 VENT HOSE
Ⓒ FWD WATER TANK
Ⓓ H20 FILTER
Ⓔ 12 V.D.C. H20 PUMP
Ⓕ H20 HEATER
Ⓖ HEAT EXCHANGER LINES TO ENG.
Ⓗ H20 LINES TO GALLEY AND COCKPIT SHOWER
Ⓘ HOT H20 TO VANITY SINK
Ⓙ COLD H20 TO VANITY SINK
Ⓚ FWD VANITY SEACOCK
1 1/4" (31.8mm) SHEILDVAC DRAIN HOSE

QUEST LINE TEE
SINK DRAIN SEACOCK
VANITY FAUCET
QUEST LINE HOT 1/2" (12.7mm)
QUEST LINE COLD 1/2" (12.7mm)

| | |
|---|---|
| DRAWING TITLE: 380 FWD VANITY H20 DETAIL | |
| DRAWING NO. 3808057D | REVISION NO. NONE |
| DRAWN BY ENGINEERING DEPT. | DATE 3/12/98 |

This document (design) information for which HUNTER MARINE CORP. has proprietary rights.

HUNTER

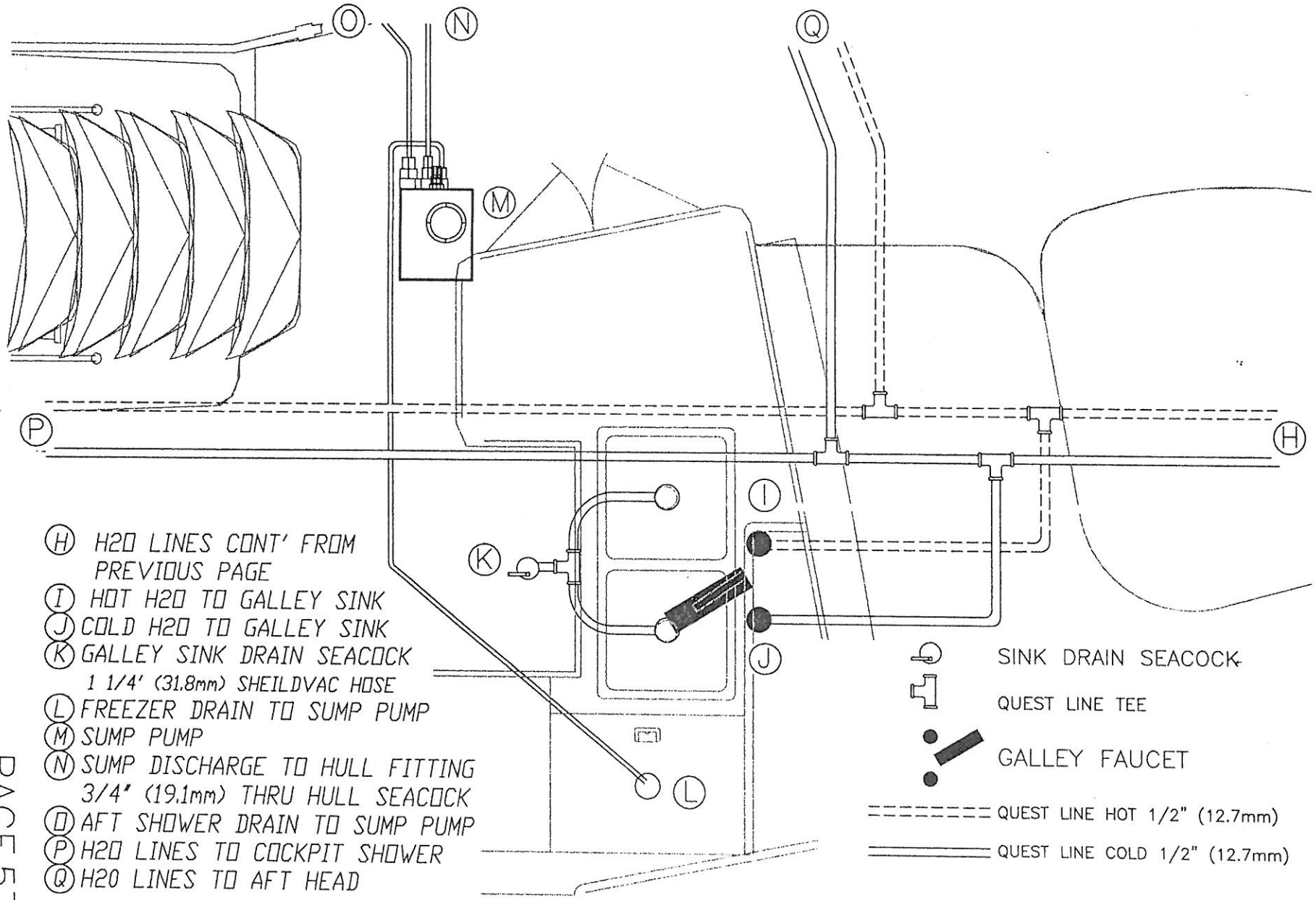


(H) H2O LINES CONT' FROM PREVIOUS PAGE
(I) HOT H2O TO GALLEY SINK
(J) COLD H2O TO GALLEY SINK
(K) GALLEY SINK DRAIN SEACOCK
1 1/4' (31.8mm) SHEILDVAC HOSE
(L) FREEZER DRAIN TO SUMP PUMP
(M) SUMP PUMP
(N) SUMP DISCHARGE TO HULL FITTING
3/4" (19.1mm) THRU HULL SEACOCK
(O) AFT SHOWER DRAIN TO SUMP PUMP
(P) H2O LINES TO COCKPIT SHOWER
(Q) H2O LINES TO AFT HEAD

THIS PAGE UPDATED AS OF HULL #541 1.12.99

| 380 GALLEY H2O DETAIL | | This document discloses information for which HUNTER MARINE CORP. has proprietary rights. |
|---|---|---|
| 3808057E | NONE | HUNTER |
| ENGINEERING DEPT. | 3/12/98 | |

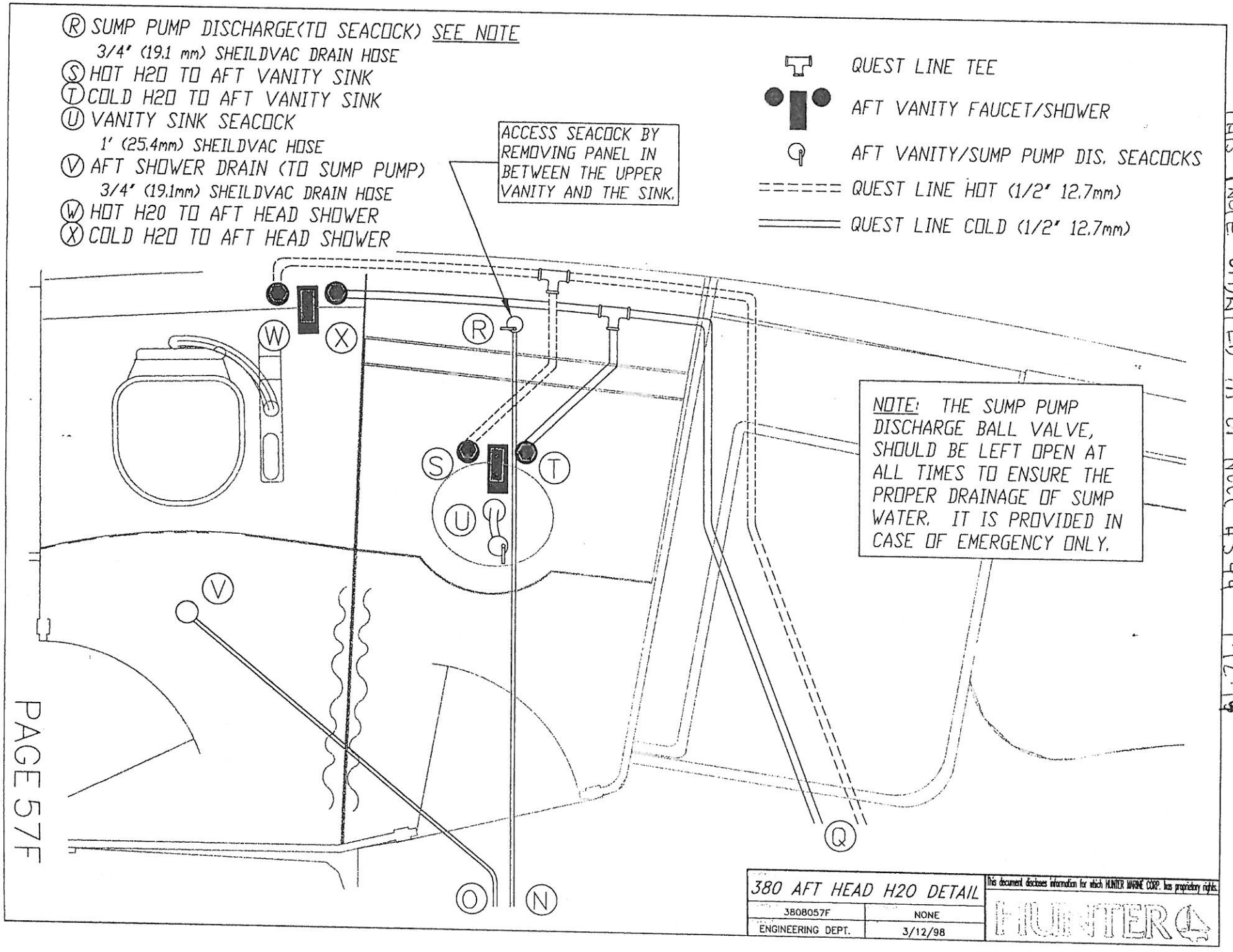


THIS PAGE UPDATED AS OF HULL #549 1.12.99

Ⓨ HOT H20 TO COCKPIT SHOWER
Ⓩ COLD H20 TO COCKPIT SHOWER

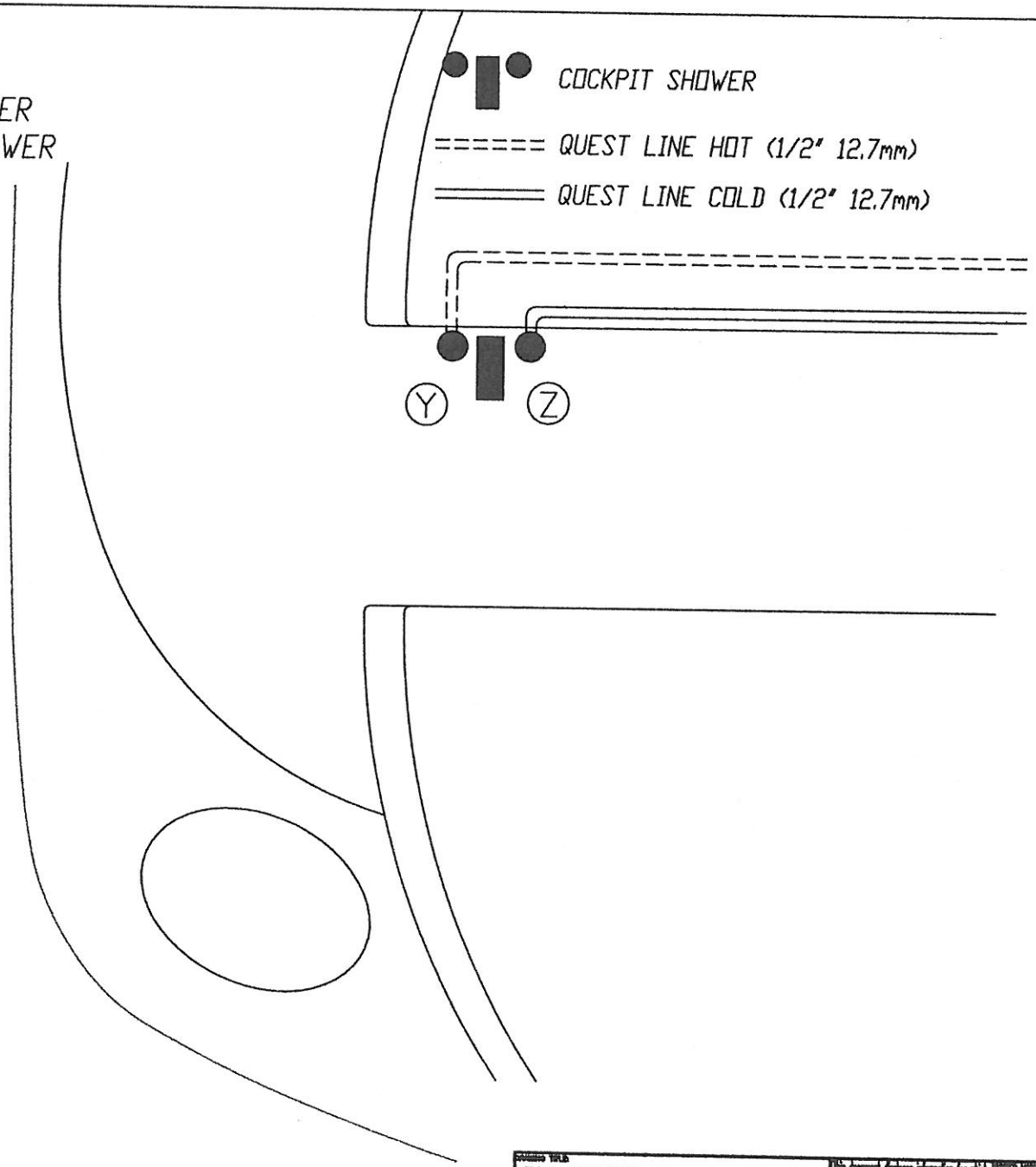


| | |
|---|---|
| DRAWING TITLE: 380 COCKPIT SHOWER H20 DETAIL | |
| DRAWING NO. 3808057G | REVISION NO. NONE |
| DRAWN BY: ENGINEERING DEPT. | DATE: 3/12/98 |

This document discloses information for which HUNTER MARINE CORP. has proprietary rights.

HUNTER

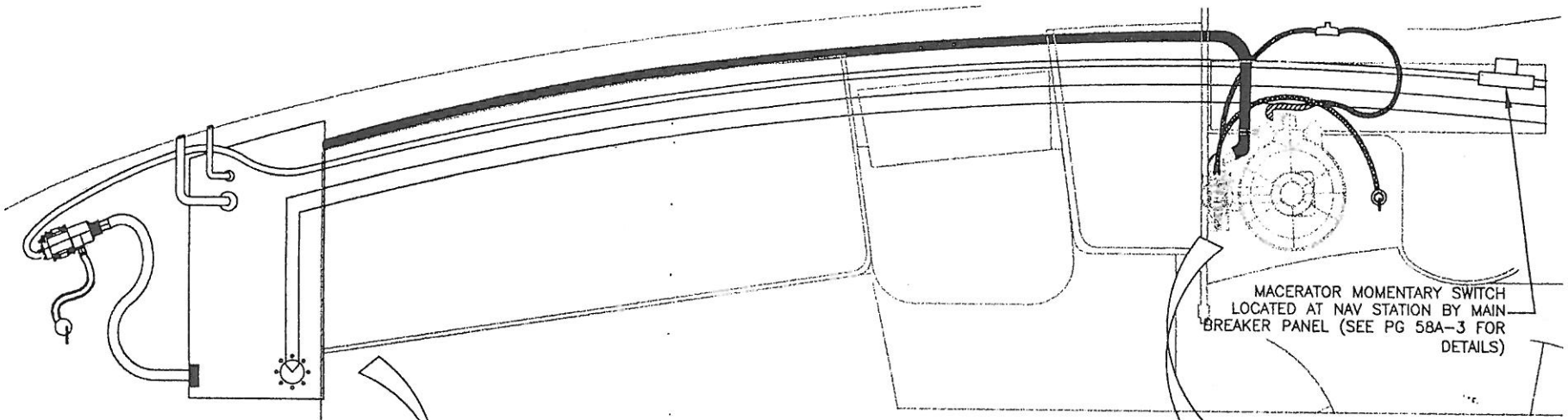


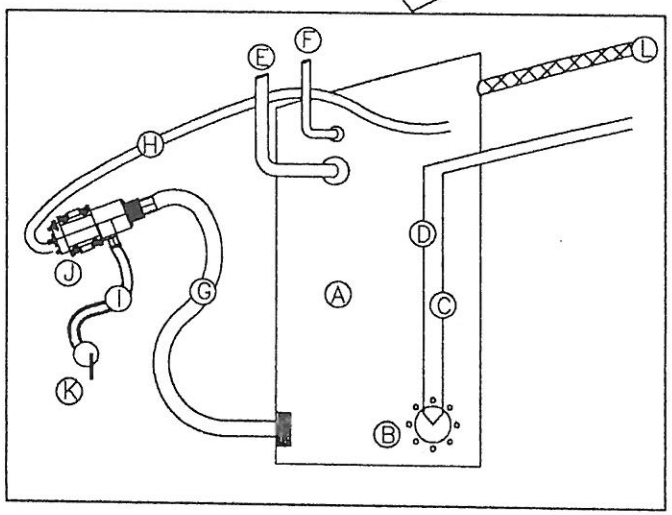


Ⓐ HOLDING TANK 32 gallons (121 liters)
Ⓑ WASTE TANK SENDING UNIT (SEE PG 58B)
Ⓒ SENDING UNIT POWER LEAD TO SW. PANEL (WHITE 16 ga. & BLACK 16ga.)
Ⓓ SENDING UNIT GROUND TO BUSS BAR
Ⓔ WASTE PUMPOUT (TO DECK FITTING) 1.5" (38.1 mm) SANITATION HOSE
Ⓕ WASTE TANK VENT (HULL FITTING) 3/4" (19.1 mm) SANITATION HOSE
Ⓖ FROM HOLDING TANK TO MACERATOR 1 1/2" (38.1 mm) SANITATION HOSE
Ⓗ POWER LEADS TO MACER. FROM SW. PANEL
Ⓘ 1" (25.4mm) MACERATOR DISCHARGE HOSE
Ⓙ 12 V.D.C. MACERATOR
Ⓚ MACER. DISCHRG. SEACOCK (HULL FITTING)
Ⓛ WASTE HOSE INTO TANK FROM COMMODE 1 1/2" (38.1mm) SANITATION HOSE
Ⓜ HEAD
Ⓝ VENTED LOOP
Ⓞ RAW WATER PICKUP TO HEAD 3/4" (19.1 mm) SANITATION HOSE
Ⓟ HEAD RAW WATER PICKUP SEACOCK

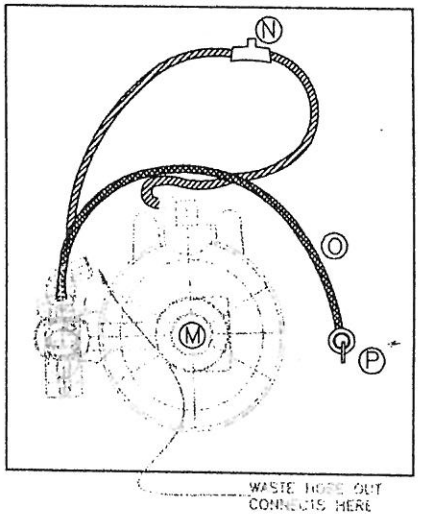


NOTE: TO OPERATE THE HEAD SEE MARINE HEAD OWNER'S MANUAL

| 380 STANDARD WASTE SYSTEM LAYOUT | |
|---|---|
| 3808058A-1 | NONE |
| ENGINEERING DEPT. | 3/13/98 |

This document discloses information for which HUNTER MARINE CORP. has proprietary rights.

HUNTER

UPDATED AS OF HULL 583 1.6.99

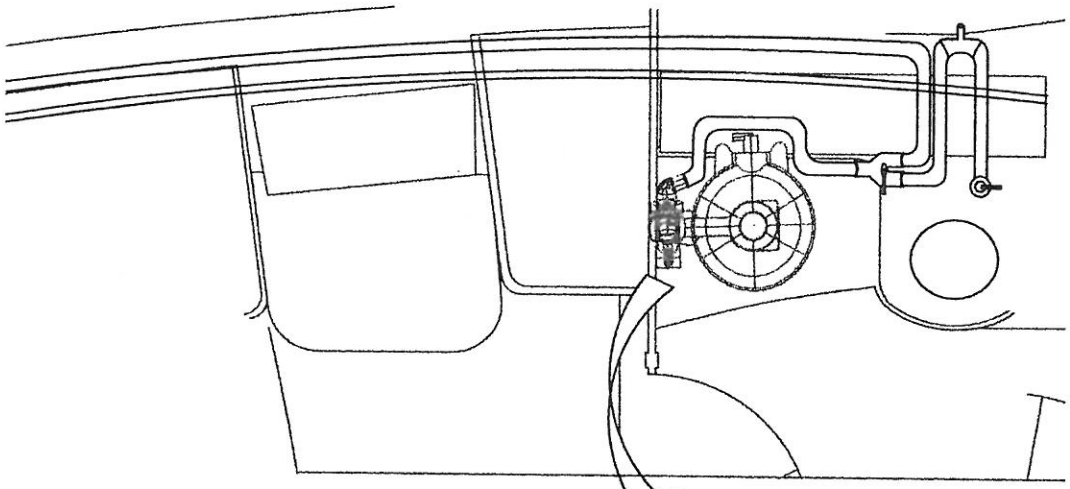

Ⓐ HEAD
Ⓑ 1 1/2" (38.7) SANITATION HOSE TO "Y" VALVE
Ⓒ 1 1/2" (38.7mm) Y–VALVE. SEE PAGE 22B FOR Y–VALVE OPERATING INSTRUCTIONS
Ⓓ SANITATION HOSE FROM Y–VALVE TO THRU HULL FITTING (1 1/2") (38.7mm)
Ⓔ 1 1/2" (38.7mm) SANITATION HOSE TO WASTE HOLDING TANK (SEE PREVIOUS PAGE)
Ⓕ POWER LEADS TO MAIN DISTRIBUTION PANEL
Ⓖ Y–VALVE VENTED LOOP LOCATED BEHIND VANITY

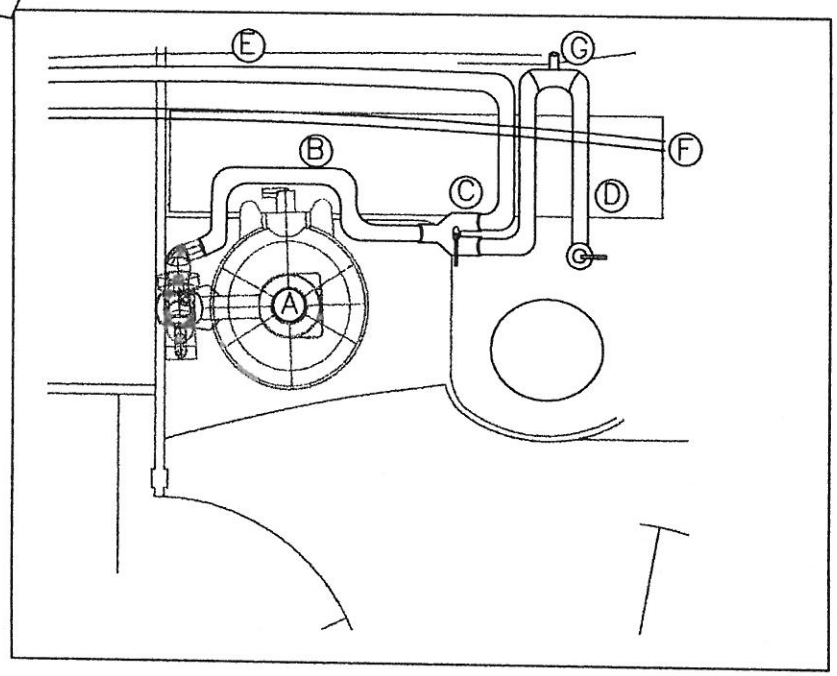


NOTE: TO OPERATE THE HEAD SEE MARINE HEAD OWNER'S MANUAL

SEE PREVIOUS PAGE FOR WIRE LEADS, WATER PICKUP, ETC.

PAGE 58A–2

| | |
|---|---|
| DRAWING TITLE: 380 (SELECT OVERSEAS) WASTE SYSTEM LAYOUT | |
| DRAWING NO. 380805BA–2 | REVISION NO. NONE |
| DRAWN BY ENGINEERING DEPT. | DATE 3/13/98 |

This document discloses information for which HUNTER MARINE CORP. has proprietary rights.

HUNTER

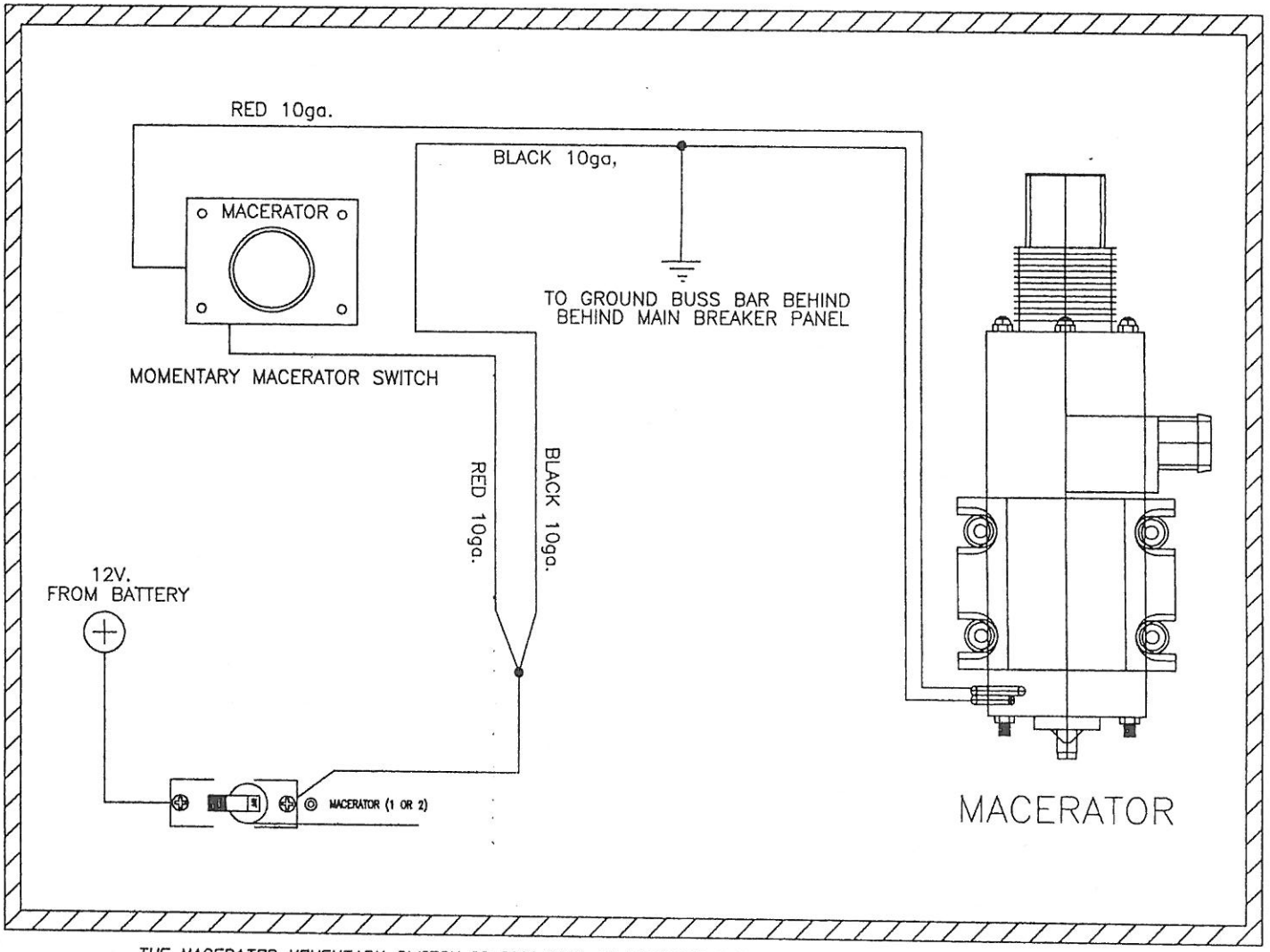


THE MACERATOR MOMENTARY SWITCH IS PROVIDED TO PROHIBIT THE 'DRY RUNNING' OF THE MACERATOR. TO OPERATE THE MACERATOR, TURN THE MACERATOR BREAKER TO THE 'ON' POSITION. WHILE EITHER WATCHING THE WASTE TANK LEVEL INDICATOR, OR LISTENING TO THE PITCH OF THE PUMP, PUSH THE MOMENTARY SWITCH IN. THIS WILL ACTIVATE THE MACERATOR. ONCE THE TANK LEVEL INDICATOR REACHES 'EMPTY', OR THE PITCH CHANGES NOTICABLY, RELEASE THE MOMENTARY SWITCH AND TURN THE BREAKER TO THE 'OFF' POSITION. NOTE: OCCASIONALLY THE TANK SENDING UNIT BECOMES STUCK, THEREFORE IT IS MORE AFFECTIVE AND SAFER FOR THE PUMP IF THE OPERATOR USES THE 'LISTENING' METHOD TO DETERMINE IF THE TANK HAS BEEN EMPTIED.

UPDATED AS OF HULL #43 1-6-99

| DRAWING TITLE: H380 BASIC MACERATOR MOMENTARY SWITCH SCHEMATIC | | This document discloses information for which HUNTER MARINE CORP. has proprietary rights. |
|---|---|---|
| DRAWING NO. 380805RA-3 | REVISION NO. NONE | HUNTER |
| DRAWN BY: | DATE: | |

P1

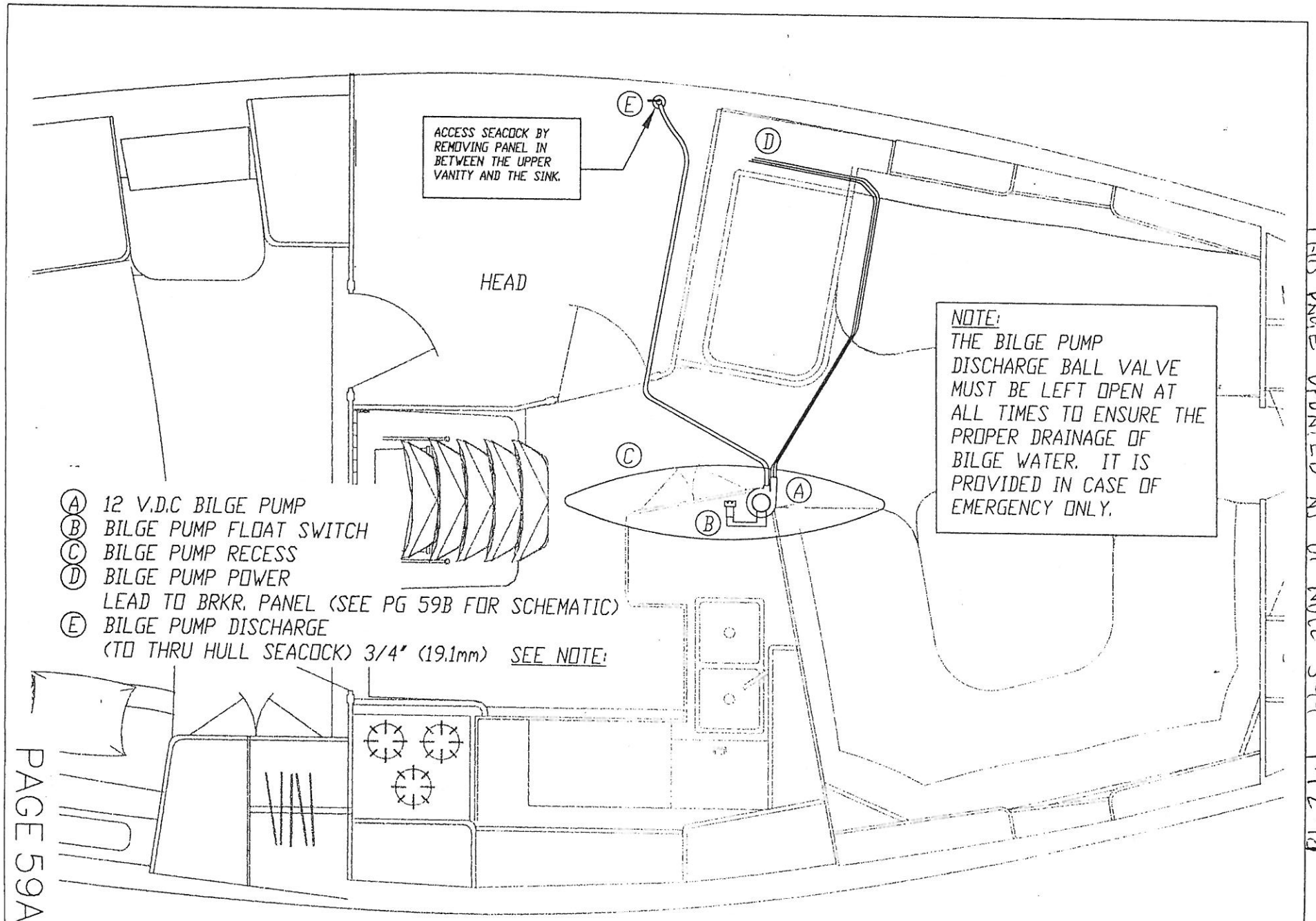


THIS PAGE UPDATED AS OF HULL S49 1.12.98

| 380 MAIN BILGE PUMP SYSTEM | |
|---|---|
| 3808059A | NONE |
| ENGINEERING DEPT. | 3/16/98 |

This document discloses information for which HUNTER MARINE CORP. has proprietary rights.

HUNTER

THIS PAGE UPDATED AS OF #544 1.12.99

## OPTIONAL INVERTER BATTERY PANEL

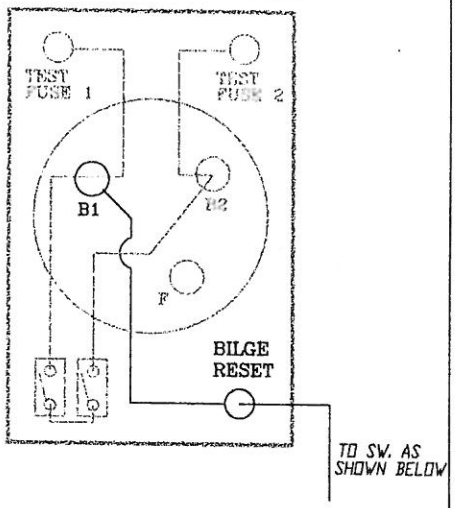


## BILGE PUMP PLUMBING DETAIL

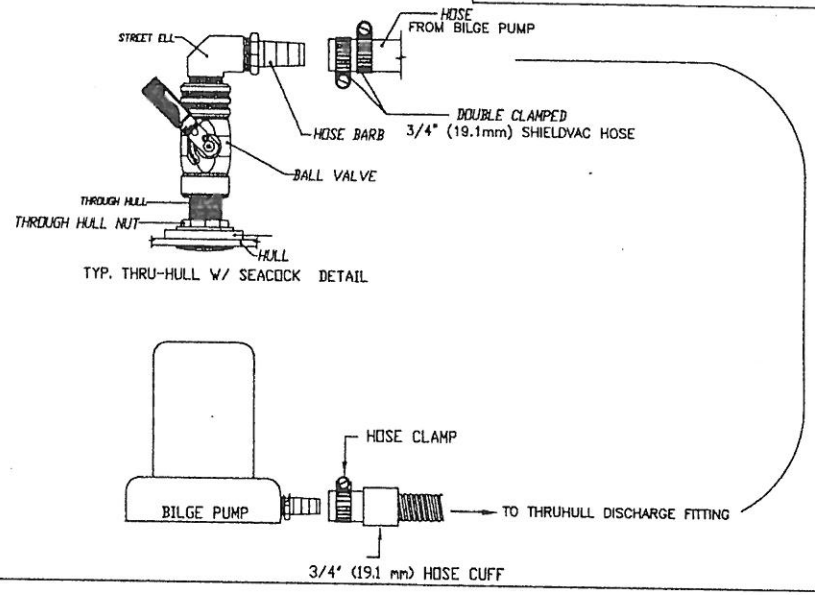


NOTE: THOUGH TWO TYPES OF PANELS ARE USED
1 FOR STD. BATT. CHARGER MODEL &
1 FOR THE OPTIONAL INVERTER MODEL
THE WIRING FOR THE BILGE RESET IS THE SAME

## STD. BATT. CHARGER PANEL

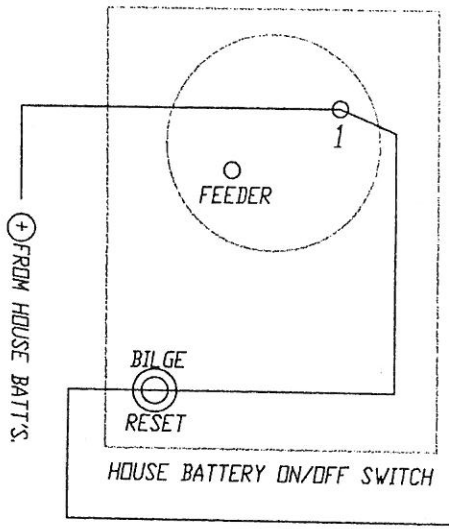


## BILGE PUMP WIRING DETAIL

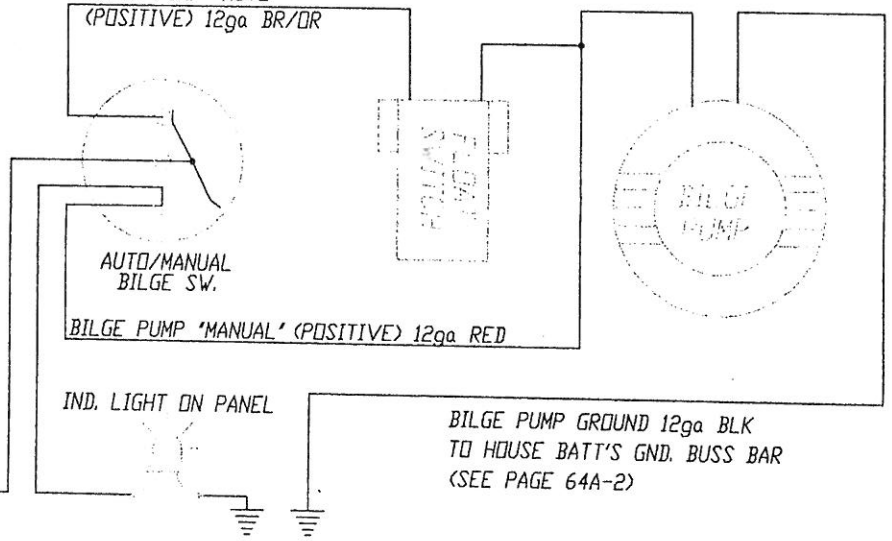


| 380 BILGE SYSTEM DETAILS | |
|---|---|
| 3808059B | NONE |
| ENGINEERING DEPT. | 3/17/98 |

This document discloses information for which HUNTER MARINE CORP. has proprietary rights.

HUNTER

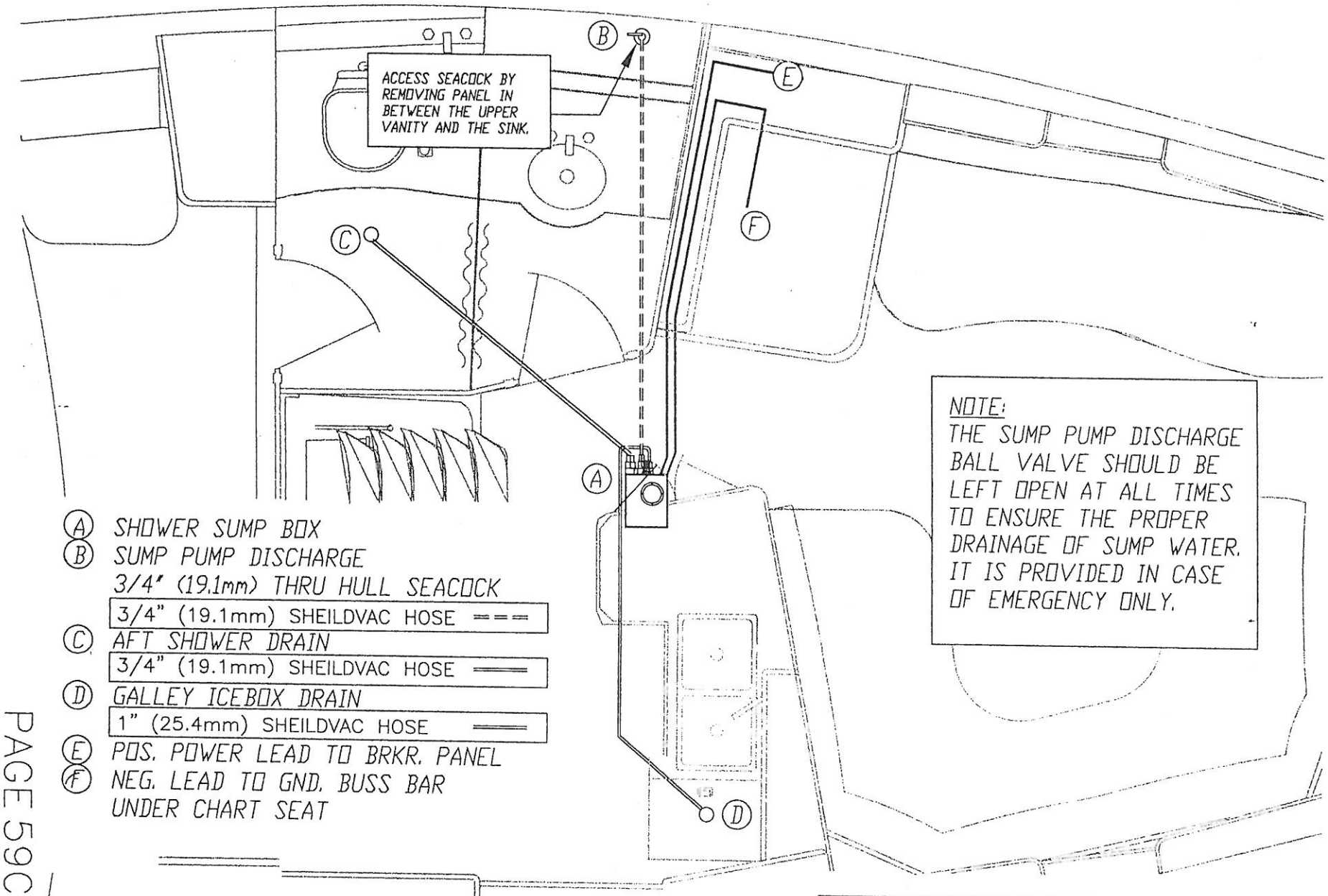


(A) SHOWER SUMP BOX

(B) SUMP PUMP DISCHARGE
3/4" (19.1mm) THRU HULL SEACOCK
3/4" (19.1mm) SHEILDVAC HOSE ===

(C) AFT SHOWER DRAIN
3/4" (19.1mm) SHEILDVAC HOSE ===

(D) GALLEY ICEBOX DRAIN
1" (25.4mm) SHEILDVAC HOSE ===

(E) POS. POWER LEAD TO BRKR. PANEL

(F) NEG. LEAD TO GND. BUSS BAR UNDER CHART SEAT

| 380 SHOWER/ICEBOX SUMP SYSTEM | |
|---|---|
| 3808059C | NONE |
| ENGINEERING DEPT. | 3/16/98 |

This document discloses information for which HUNTER MARINE CORP. has proprietary rights.

HUNTER

THIS PAGE UPDATED AS OF HULL # 544 1.12.99

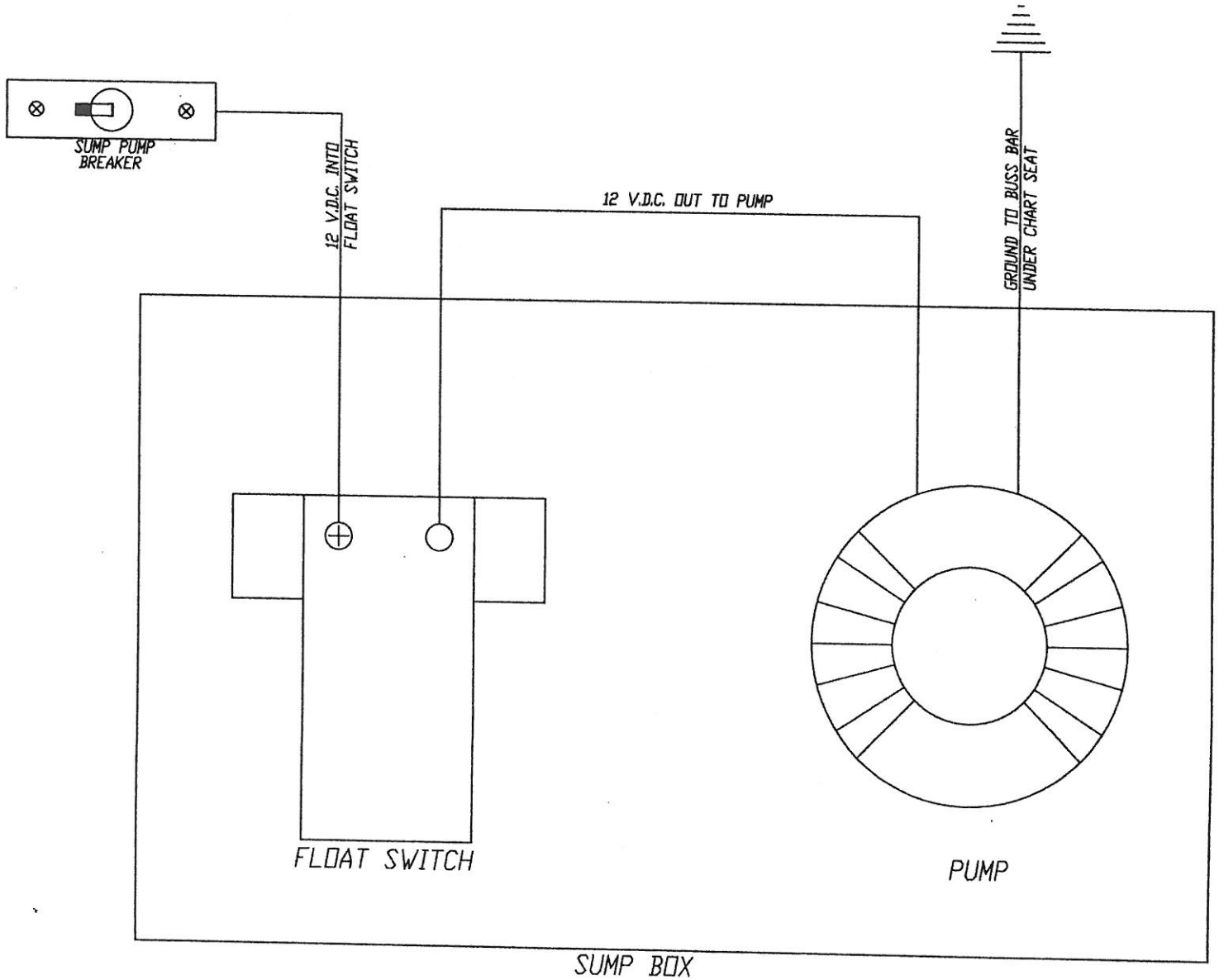


PAGE 59D

DRAWING TITLE: 380 SUMP PUMP SCHEMATIC

DRAWING NO. 3808059D | REVISION NO. NONE

DRAWN BY ENGINEERING DEPT. | DATE 3/18/98

This document discloses information for which HUNTER MARINE CORP. has proprietary rights.

HUNTER

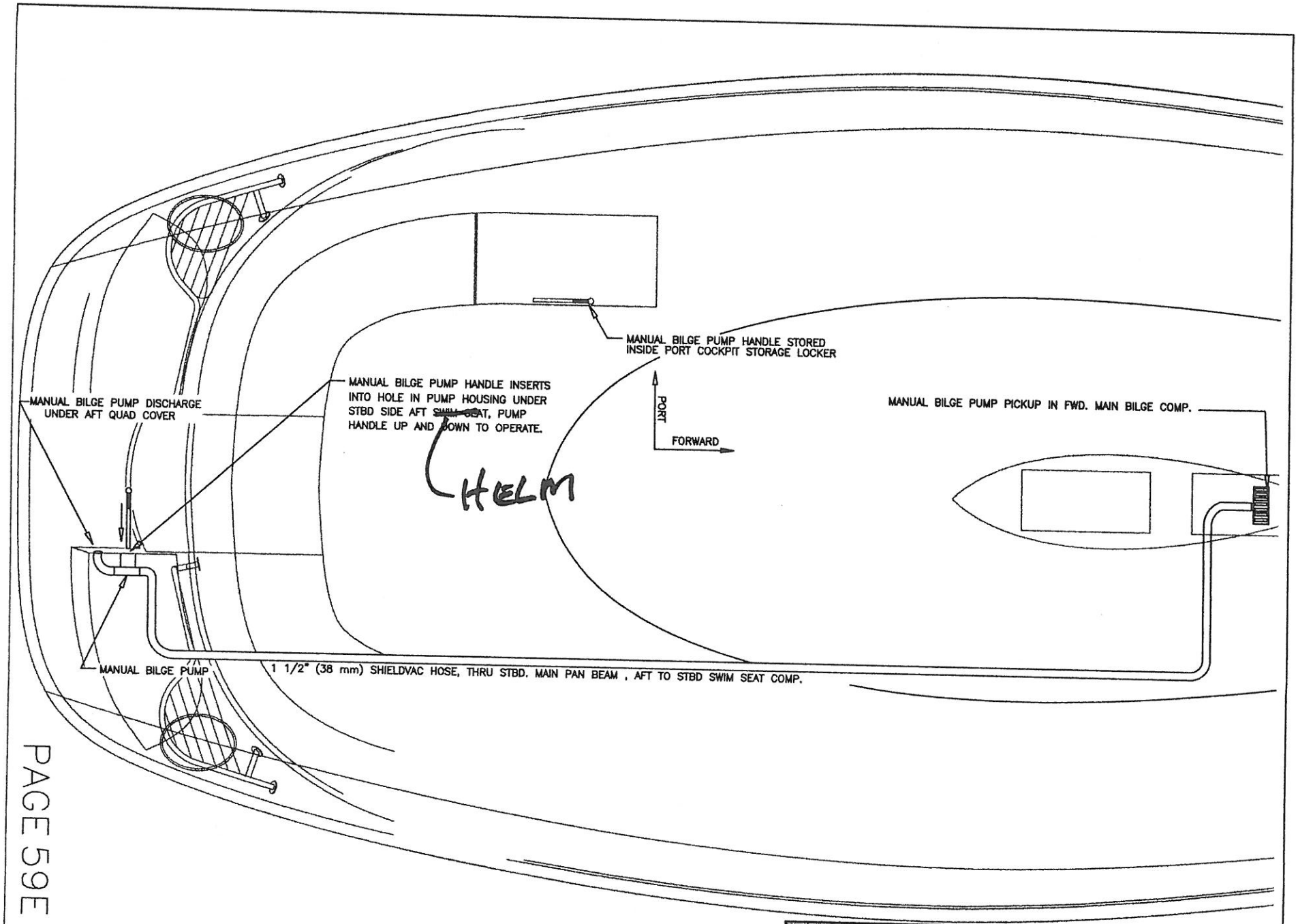


DRAWING TITLE: 380 MANUAL BILGE PUMP LAYOUT

DRAWING NO. 3808059E | REVISION NO. NONE

DRAWN BY: ENGINEERING DEPT | DATE: 3/17/98

This document contains information for which HUNTER MARINE CORP. has proprietary rights.

HUNTER

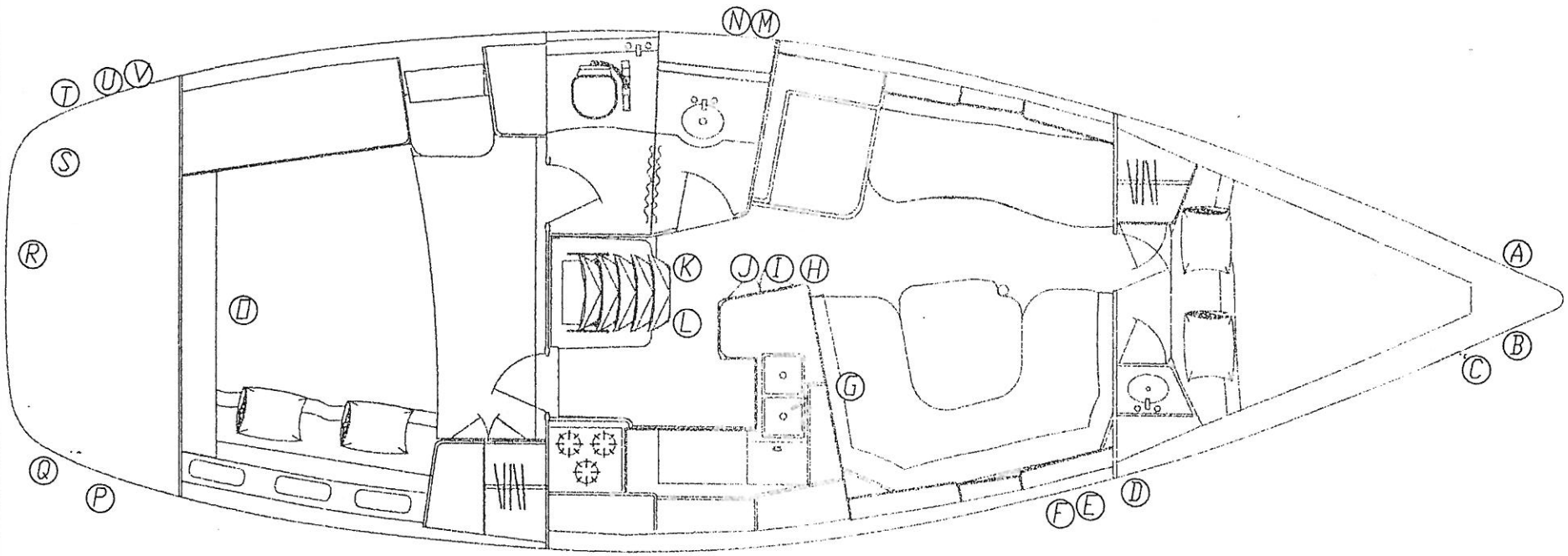


A PORT ANCHOR WELL DRAIN
B STARBOARD ANCHOR WELL DRAIN
C WATER TANK VENT
* D FWD VANITY DRAIN
E AIR CONDITIONER DISCHARGE
F REFRIGERATION DISCHARGE
* G GALLEY DRAIN
* H AIR CONDITIONER RAW WATER INTAKE
* I HEAD RAW WATER INTAKE
* J VANITY SINK DRAIN
* K ENGINE RAW WATER INTAKE
* L REFRIGERATION RAW WATER INTAKE
* M SUMP PUMP DISCHARGE
* N BILGE PUMP DISCHARGE
* O GENERATOR RAW WATER INTAKE
P LPG LOCKER DRAIN
Q GENERATOR EXHAUST
R ENGINE EXHAUST
* S MACERATOR DISCHARGE
T LPG LOCKER DRAIN
U HOLDING TANK VENT
V FUEL TANK VENT

NOTE: * = SEACOCK

| | |
|---|---|
| 380 THRU HULL LOCATIONS | |
| 3808060-A | NONE |
| ENGINEERING DEPT. | 3/28/98 |

This document discloses information for which HUNTER MARINE CORP. has proprietary rights.

HUNTER

THIS PAGE UPDATED AS OF HULL#544 1.12.99

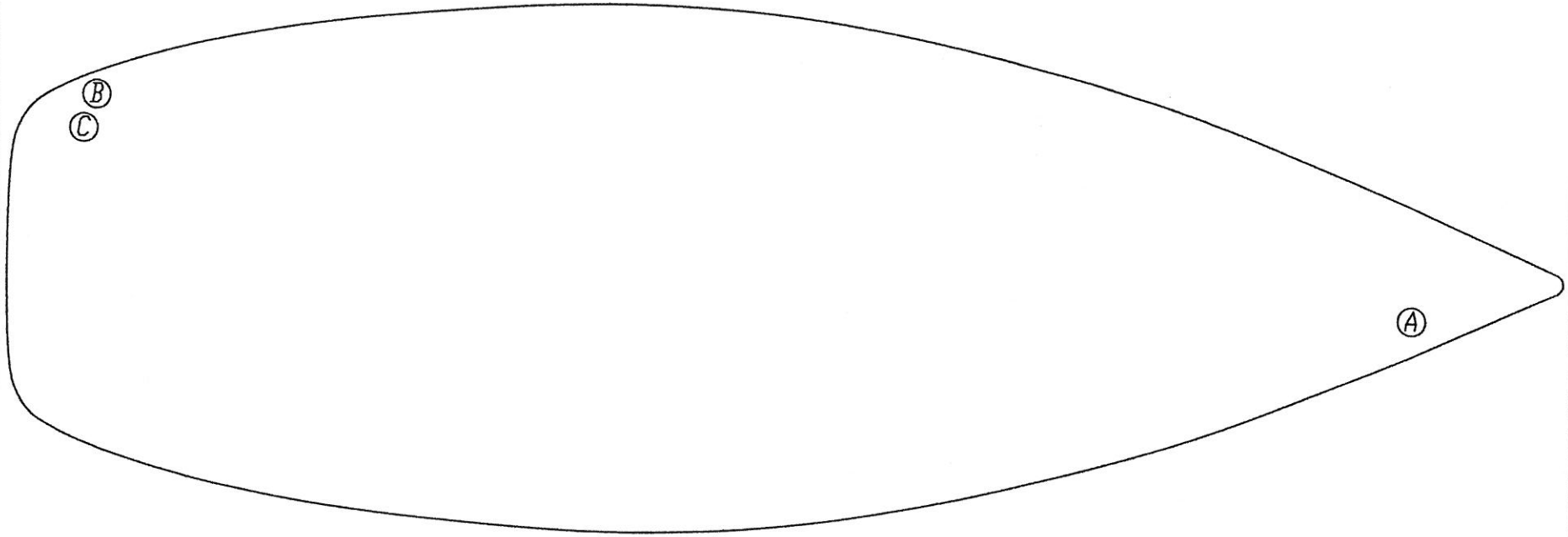


Ⓐ WATER TANK FILL DECK FITTING
Ⓑ WASTE "PUMPOUT" DECK FITTING
Ⓒ FUEL TANK FILL DECK FITTING

PAGE 60-B

| | |
|---|---|
| DRAWING TITLE: 380 THRU DECK LOCATIONS | |
| DRAWING NO. 3808060-B | REVISION NO. NONE |
| DRAWN BY: ENGINEERING DEPT. | DATE: 3/17/98 |

This document discloses information for which HUNTER MARINE CORP. has proprietary rights.

HUNTER

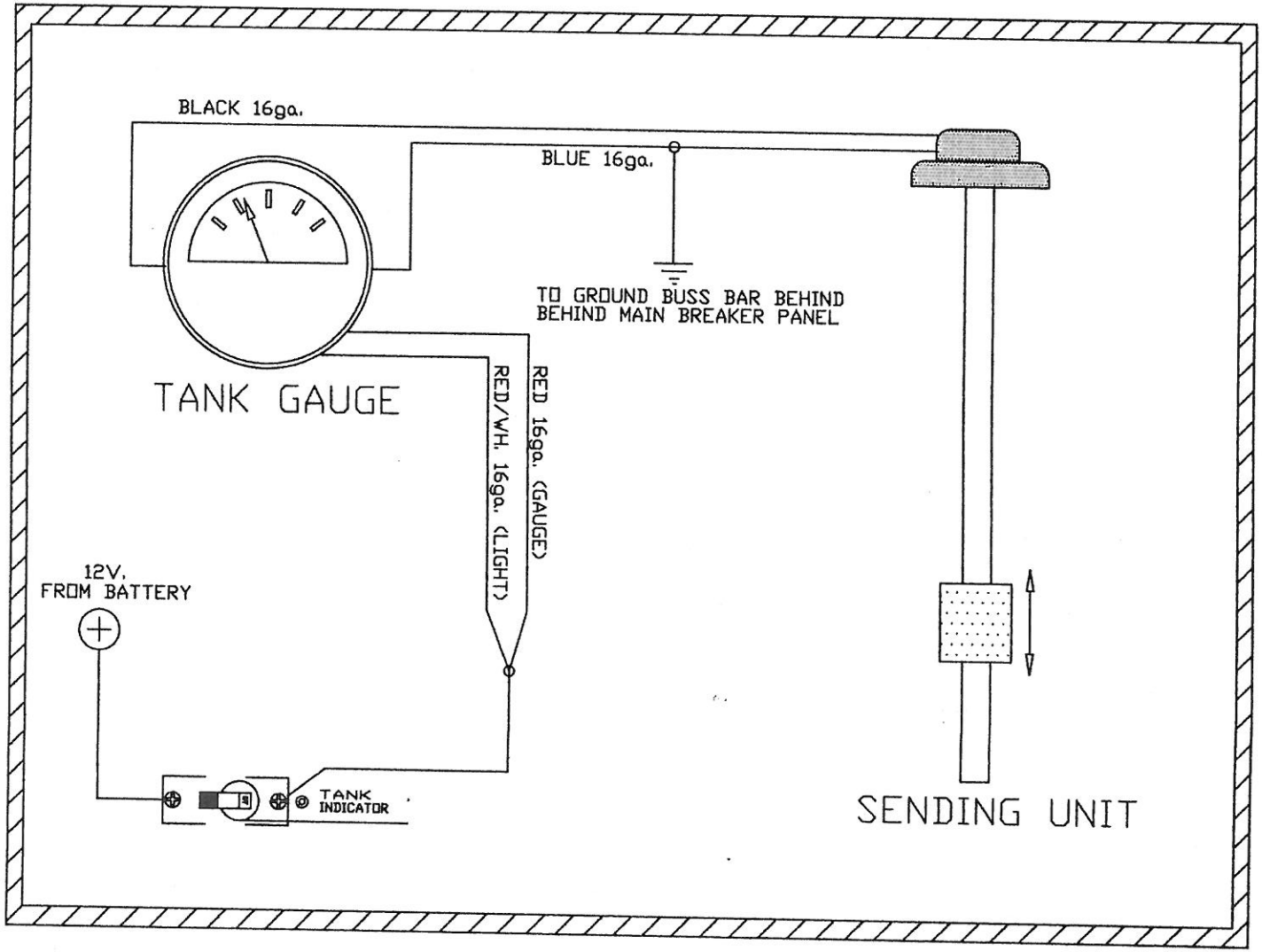


DRAWING TITLE: 380 WASTE TANK SENDING UNIT SCHEMATIC

| | |
|---|---|
| DRAWING NO. 3808058B | REVISION NO. NONE |
| DRAWN BY ENGINEERING DEPT. | DATE 3/16/98 |

This document contains information for which HUNTER MARINE CORP. has [illegible]

HUNTER

| ITEM # | DESCRIPTION |
|---|---|
| 1 | ENGINE FUEL FILTER |
| 2 | ENGINE FUEL HOSE |
| 3 | DIESEL FILL (DECK FITTING) |
| 4 | DIESEL TANK VENT (HULL FITTING) |
| 5 | DIESEL FILL HOSE |
| 6 | DIESEL VENT HOSE |
| 7 | SENDING UNIT |
| | |




FUEL TANK GAUGE WIRING DIAGRAM

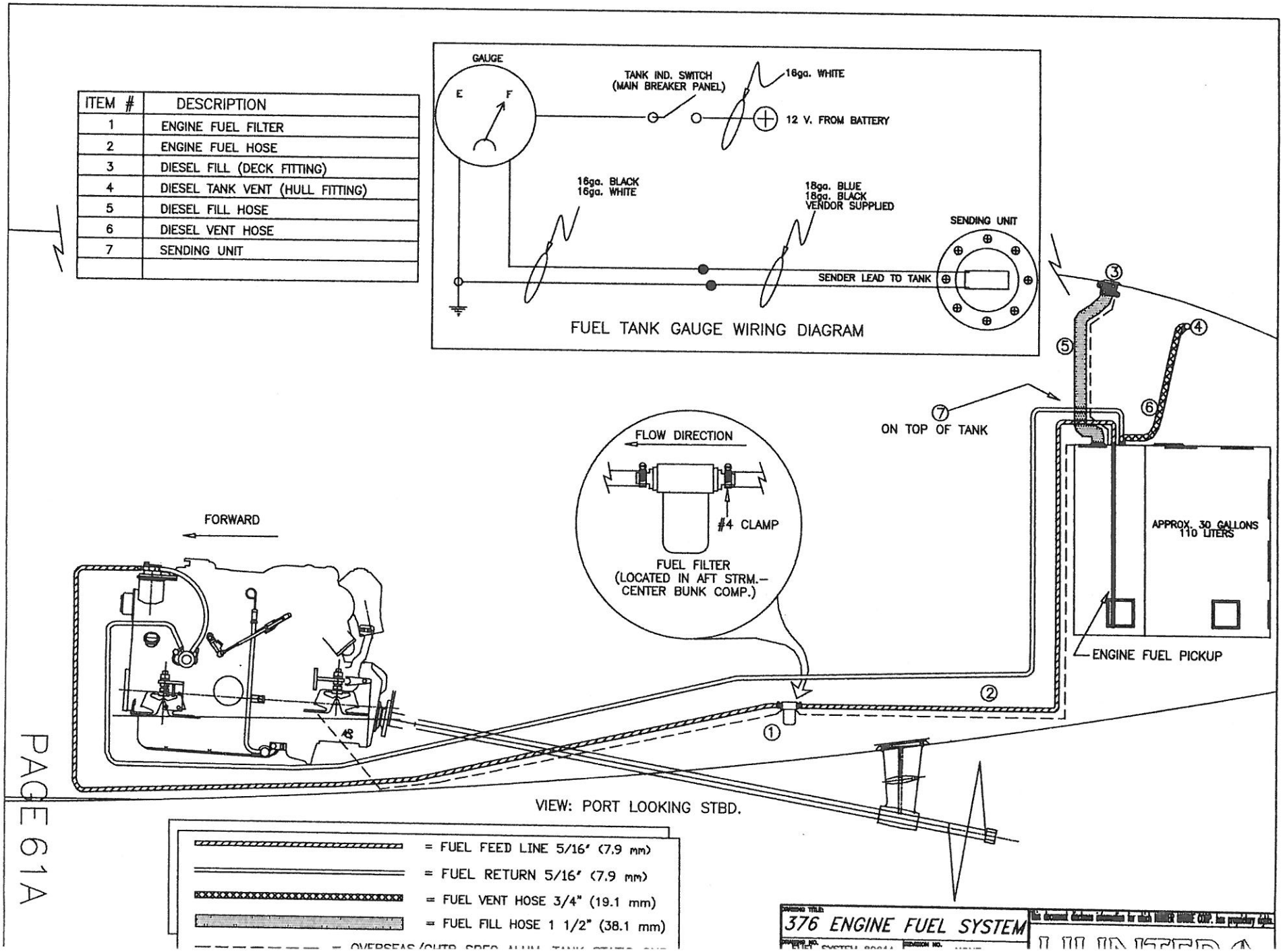

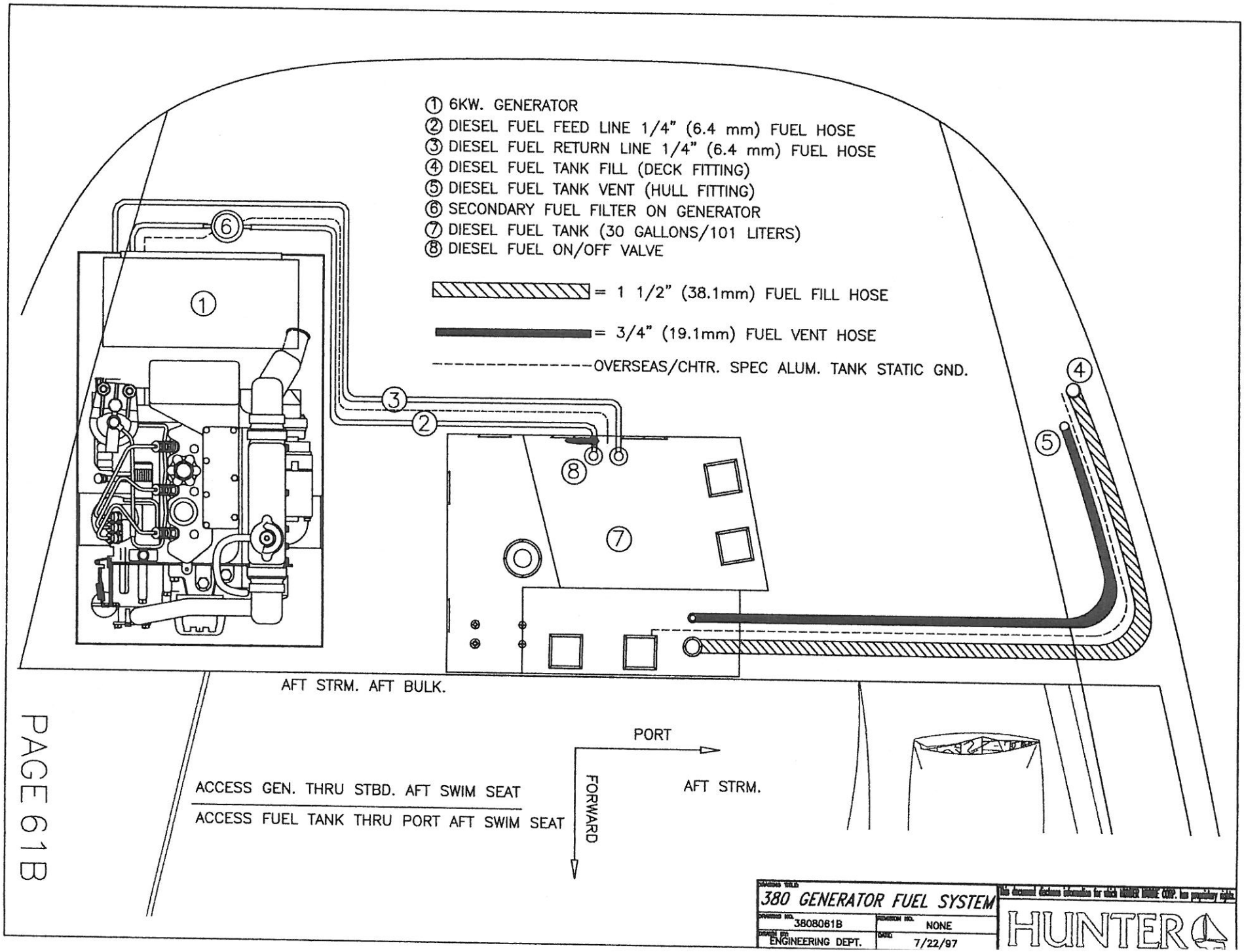
① 6KW. GENERATOR
② DIESEL FUEL FEED LINE 1/4" (6.4 mm) FUEL HOSE
③ DIESEL FUEL RETURN LINE 1/4" (6.4 mm) FUEL HOSE
④ DIESEL FUEL TANK FILL (DECK FITTING)
⑤ DIESEL FUEL TANK VENT (HULL FITTING)
⑥ SECONDARY FUEL FILTER ON GENERATOR
⑦ DIESEL FUEL TANK (30 GALLONS/101 LITERS)
⑧ DIESEL FUEL ON/OFF VALVE
= 1 1/2" (38.1mm) FUEL FILL HOSE
= 3/4" (19.1mm) FUEL VENT HOSE
OVERSEAS/CHTR. SPEC ALUM. TANK STATIC GND.
AFT STRM. AFT BULK.
PORT
FORWARD
AFT STRM.
ACCESS GEN. THRU STBD. AFT SWIM SEAT
ACCESS FUEL TANK THRU PORT AFT SWIM SEAT
380 GENERATOR FUEL SYSTEM
3808061B
NONE
ENGINEERING DEPT.
7/22/97
HUNTER

THIS PAGE UPDATED AS OF 9/18/98

# NOTE TO CONSUMER

THE FOLLOWING PAGES PROVIDE DETAILED INFORMATION, SCHEMATICS ETC. PERTAINING TO THE H380 **STANDARD** ELECTRICAL SYSTEMS AS WELL AS THE **OPTIONAL** ELECTRICAL SYSTEMS.

BE SURE TO READ THE DRAWING TITLE IN THE TITLE BLOCK TO BE SURE YOU ARE REFERRING TO THE CORRECT SYSTEM FOR YOUR MODEL.

MAJOR DIFFERENCES EXIST FOR EXAMPLE IN THE CHARGING SYSTEM SCHEMATICS WHERE THE STANDARD MODEL IS EQUIPPED WITH A BATTERY CHARGER AND THE OPTIONAL MODEL IS EQUIPPED WITH AN INVERTER/CHARGER.

## H380 ELECTRICAL SYSTEM CONTENTS

PAGES 63A-2 THRU 63G CONTAINS **A.C.** POWER SYSTEMS
(110 V.A.C.) (220 V.A.C. ON OVERSEAS MODELS)


BASIC POWER SYSTEMS / MAIN DIST. PANEL DESCRIPTION ..... **PAGES 63A-2 THRU 63A-8**

POWER SYSTEMS TROUBLESHOOTING GUIDE .....**PAGES 63A-9 THRU 63A-12**

A.C. POWER PANEL SCHEMATICS: STD AND W/OPT. GEN. & INV.....**PAGES 63A-13 & 63A-14**

SELECTOR SWITCH PANELS..... **PAGES 63A15 & 63A-16**

A.C. POWER WIRING.....**PAGES 63B & 63C**

OPTIONAL AIR CONDITIONING SYSTEM .....**PAGES 63D-1 THRU 63D-3**

OPTIONAL GENERATOR SYSTEM .....**PAGES 63E-1 THRU 63E-3**

OPTIONAL INVERTER/STANDARD BATTERY CHARGER SYSTEM .....**PAGES 63F-1 THRU 63F-4**

AC CONSUMER NOTES.....**PAGE 63G**


PAGES 64A-1 THRU 64J CONTAINS **D.C.** POWER SYSTEMS
(12 VOLT D.C.)


D.C. PANEL SCHEMATICS AND GROUNDING SYSTEM .....**PAGES 64A-1 THRU 64A-3**

12 VOLT LIGHTING / SPEAKERS / STEREO .....**PAGES 64B-1 THRU 64B-3**

12 VOLT DECK WIRING .....**PAGES 64C**

OPTIONAL WINDLASS .....**PAGES 64D-1 THRU 64D-2**

OPTIONAL ELECTRIC HALYARD .....**PAGES 64E-1 & 64E-2**

HEADLINER WIRE CHASE LOCATION .....**PAGE 64F**

COURTESY LIGHT WIRING .....**PAGE 64G**

REFRIGERATION SYSTEM.....**PAGE 64H-1 THRU 64H-3**

PAN WIRE CHASE LOCATIONS.....PAGE 64I

DC CONSUMER NOTES.....PAGE 64J

00 SHORE POWER WIRING.....PAGE 65A

ELECTRIC WIRING COLOR / GUAGE CHART.....PAGE 65B

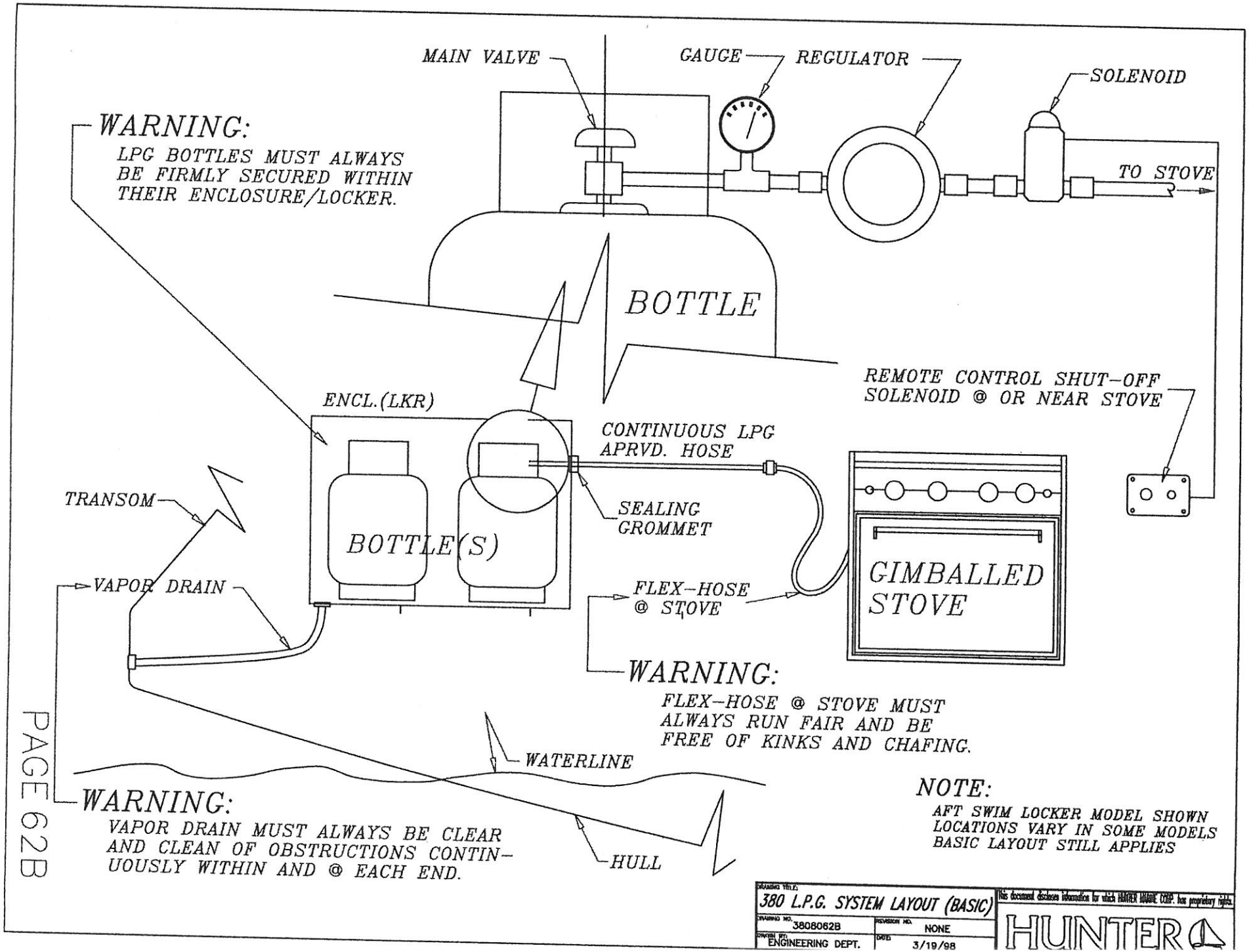
MAIN VALVE
GAUGE
REGULATOR
SOLENOID
TO STOVE
WARNING:
LPG BOTTLES MUST ALWAYS BE FIRMLY SECURED WITHIN THEIR ENCLOSURE/LOCKER.
BOTTLE
REMOTE CONTROL SHUT-OFF SOLENOID @ OR NEAR STOVE
ENCL.(LKR)
CONTINUOUS LPG APRVD. HOSE
TRANSOM
SEALING GROMMET
BOTTLE(S)
VAPOR DRAIN
FLEX-HOSE @ STOVE
GIMBALLED STOVE
WARNING:
FLEX-HOSE @ STOVE MUST ALWAYS RUN FAIR AND BE FREE OF KINKS AND CHAFING.
WATERLINE
WARNING:
VAPOR DRAIN MUST ALWAYS BE CLEAR AND CLEAN OF OBSTRUCTIONS CONTINUOUSLY WITHIN AND @ EACH END.
HULL
NOTE:
AFT SWIM LOCKER MODEL SHOWN
LOCATIONS VARY IN SOME MODELS
BASIC LAYOUT STILL APPLIES
DRAWING TITLE: 380 L.P.G. SYSTEM LAYOUT (BASIC)
DRAWING NO. 3808062B
REVISION NO. NONE
DRAWN BY: ENGINEERING DEPT.
DATE 3/19/98
This document discloses information for which HUNTER MARINE CORP. has proprietary rights.
HUNTER

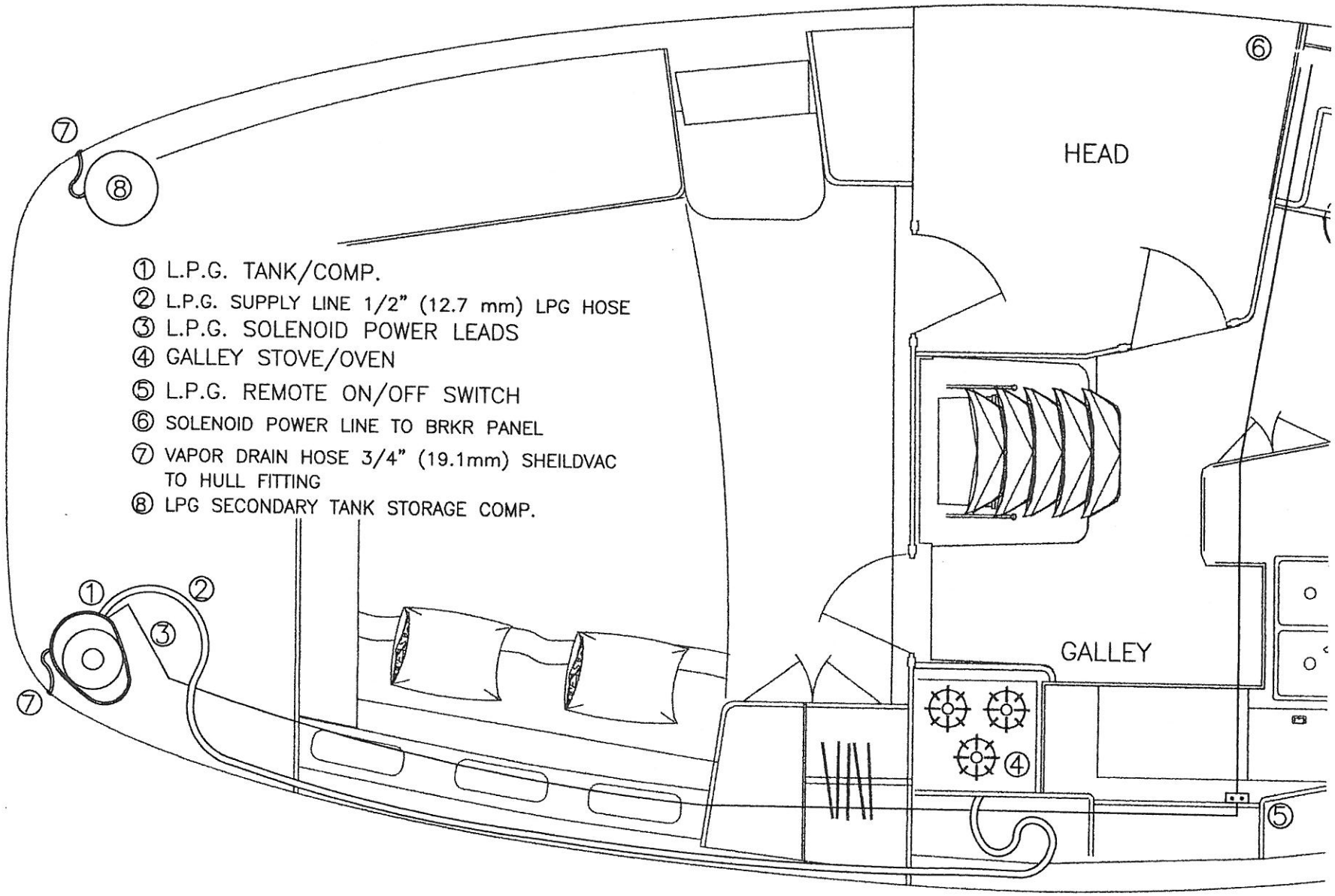


380 L.P.G. SYSTEM LAYOUT

3808062A | NONE

HUNTER

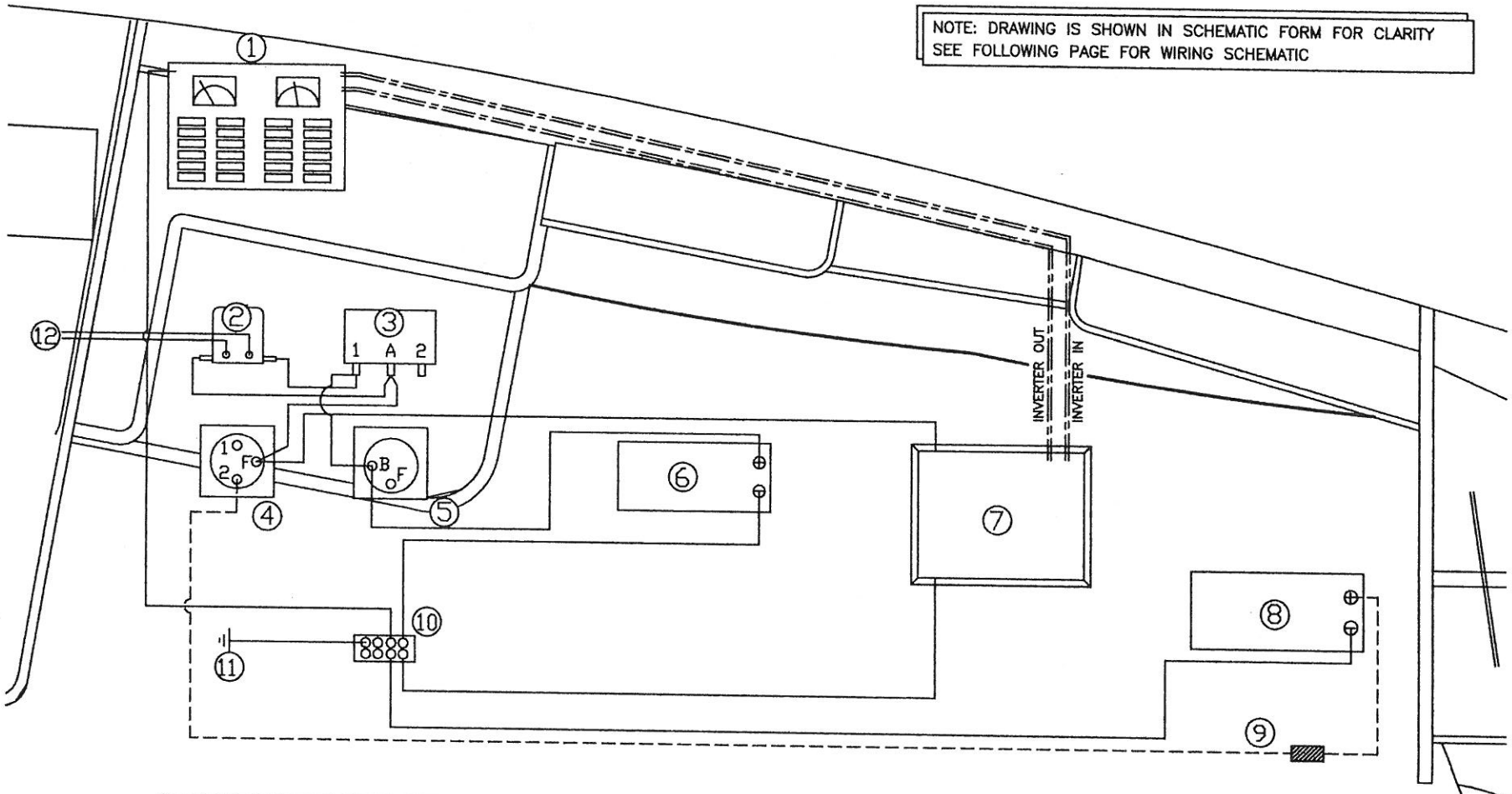


① MAIN BREAKER PANEL
② SOLENOID
③ ISOLATOR
④ HSE. BATTERY ON/OFF SW.
⑤ START BATTERY ON/OFF SW.
⑥ START BATTERY
⑦ INVERTER
⑧ HOUSE BATTERY
⑨ 300 AMP INLINE FUSE
⑩ GROUNDING BUSS BAR
⑪ TO ENGINE
⑫ TO ENGINE KEY SWITCH

——————— 10/3 BOAT CABLE
- - - - - - - 2/0 RED

| | |
|---|---|
| DRAWING TITLE: 380 (OPTIONAL) INVERTER SYSTEM LAYOUT | This document contains information for which HUNTER MARINE CORP. has proprietary rights. |
| DRAWING NO. 3808063F-2 | REVISION NO. NONE |
| DRAWN BY: ENGINEERING DEPT. | DATE: 4/13/98 |

HUNTER

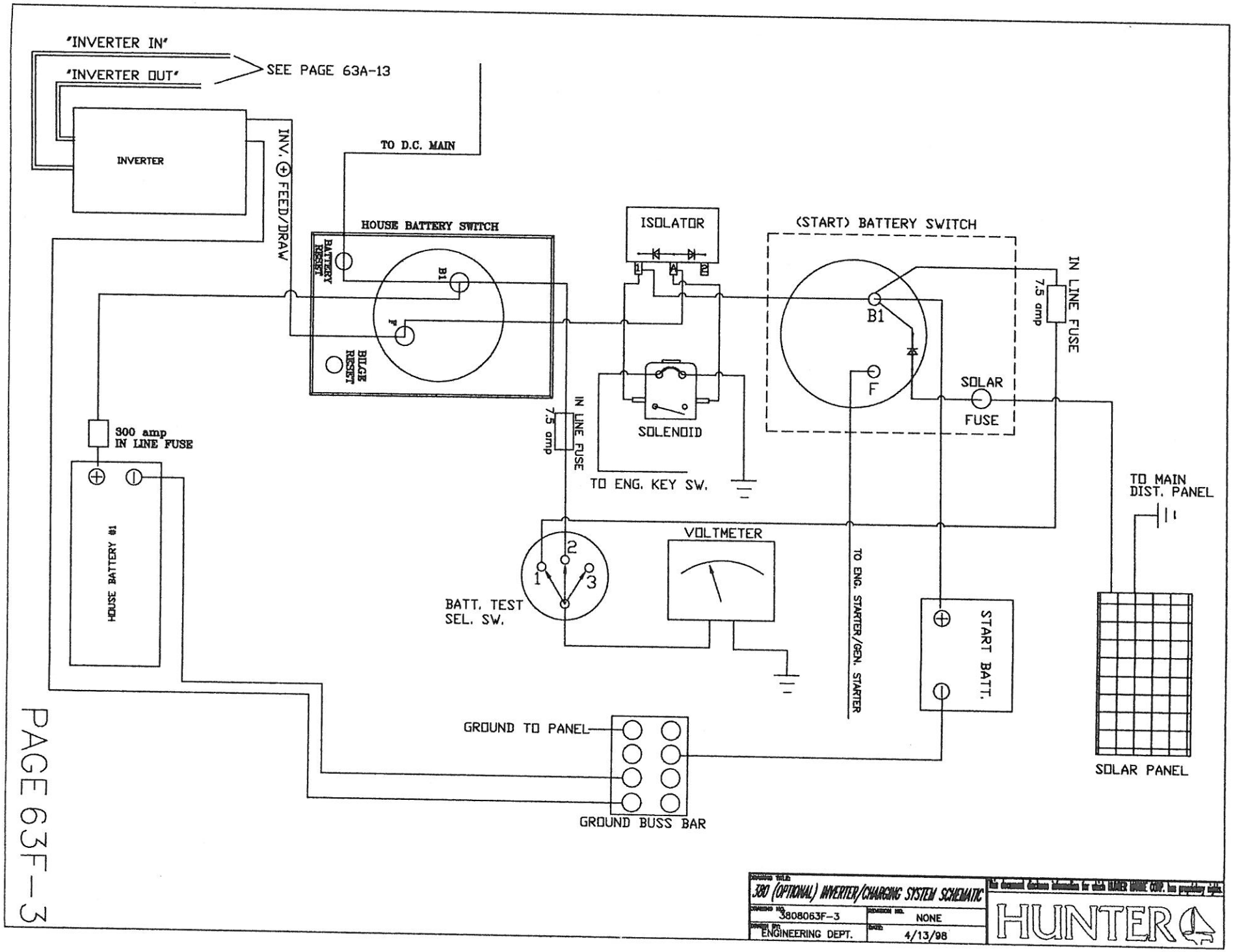
'INVERTER IN'
'INVERTER OUT'
SEE PAGE 63A-13
INVERTER
INV. ⊕ FEED/DRAW
TO D.C. MAIN
HOUSE BATTERY SWITCH
BATTERY RESET
B1
F
BILGE RESET
ISOLATOR
SOLENOID
TO ENG. KEY SW.
(START) BATTERY SWITCH
B1
F
SOLAR FUSE
IN LINE FUSE
7.5 amp
IN LINE FUSE
7.5 amp
300 amp IN LINE FUSE
HOUSE BATTERY #1
VOLTMETER
BATT. TEST SEL. SW.
1
2
3
TO ENG. STARTER/GEN. STARTER
START BATT.
TO MAIN DIST. PANEL
SOLAR PANEL
GROUND TO PANEL
GROUND BUSS BAR
PAGE 63F-3
380 (OPTIONAL) INVERTER/CHARGING SYSTEM SCHEMATIC
3808063F-3
NONE
ENGINEERING DEPT.
4/13/98
HUNTER

# THIS PAGE IS PROVIDED FOR ANY ADDITIONAL AC ELECTRICAL INFORMATION.

NOTE: ON 220V. OVERSEAS MODELS THE MAIN DISTRIBUTION PANEL AMPERAGES ARE AS FOLLOWS:

| | |
|---|---|
| SHORE POWER AC MAIN/S | 15 amp |
| OUTLETS | 10 amp |
| MICROWAVE OVEN | 10 amp |
| WATER HEATER | 10 amp |
| BATTERY CHARGER | 10 amp |
| AIR CONDITIONING | 15 amp |

SEE PAGE 65B FOR FURTHER DETAILS

HUNTER

380 CONSUMER NOTES

3808063G | NONE

ENGINEERING DEPT. | 3/12/98

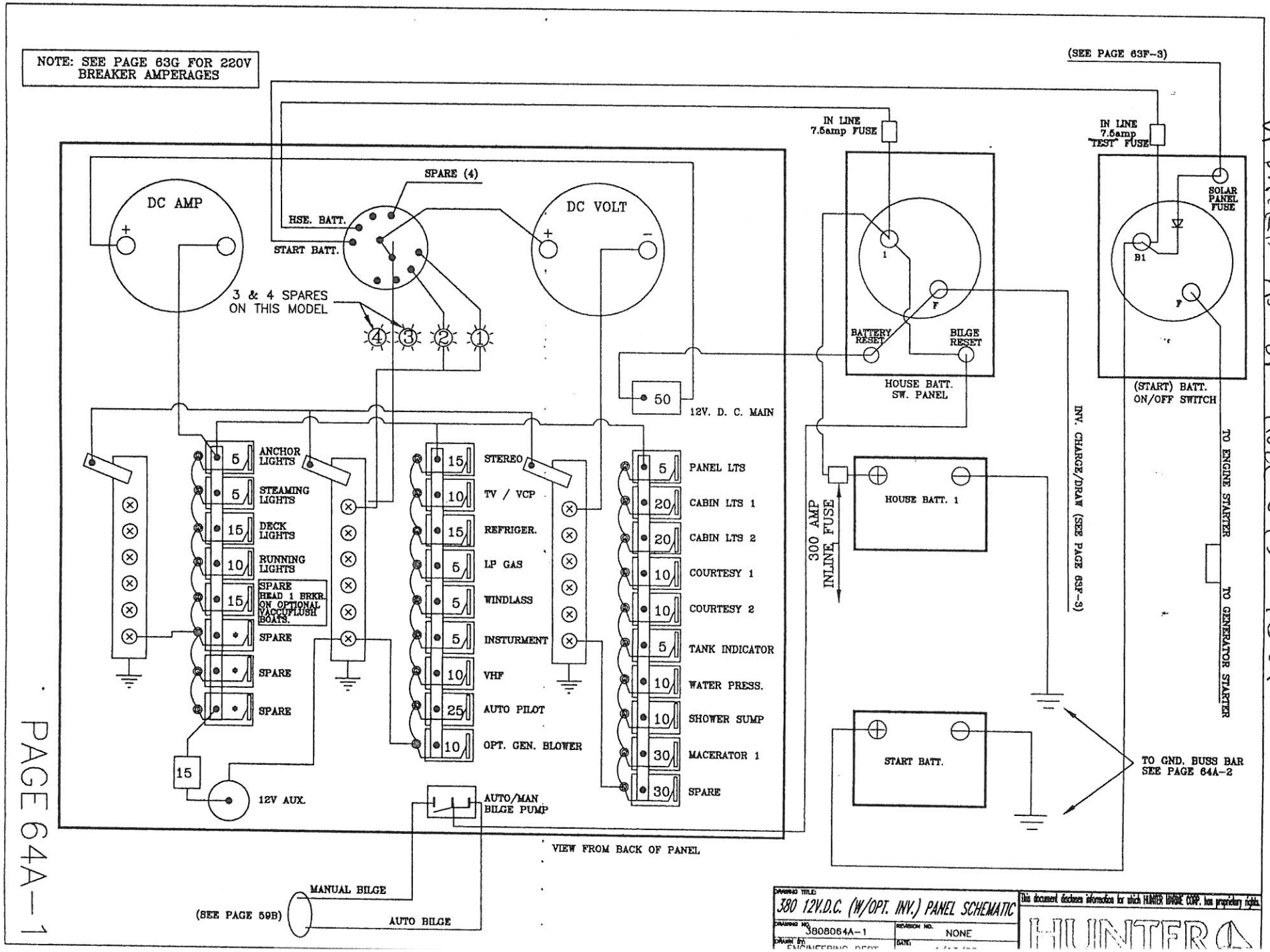


UPDATED AS OF HULL #43 1.6.99

PAGE 64A-1

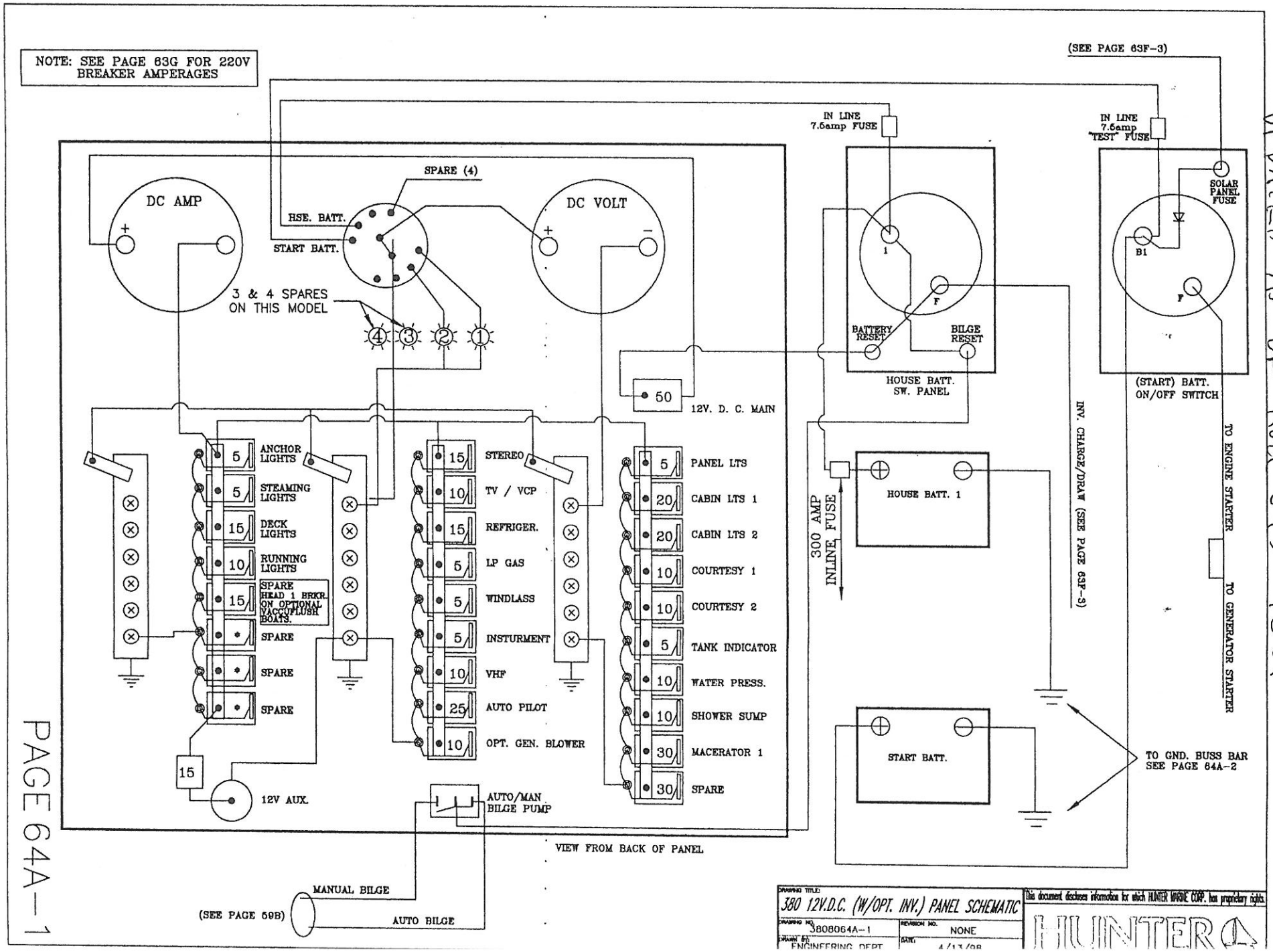


UPDATED AS OF HULL #43 1.6.99

PAGE 64A-1

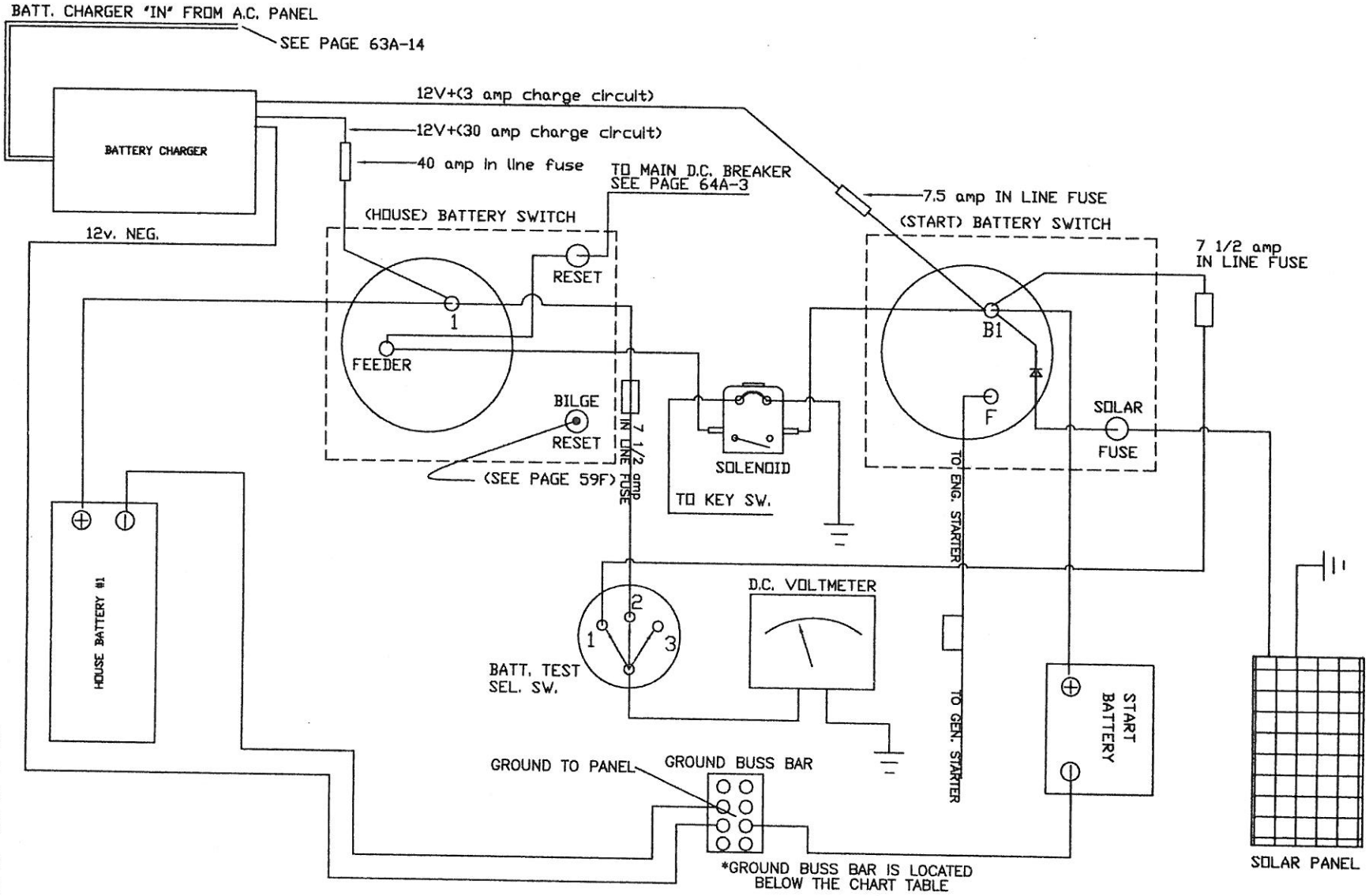


FOR BATT. CHARGER OPERATION SEE PAGE 63A-2
FOR TROUBLESHOOTING SEE PAGE 63A-9

| | |
|---|---|
| DRAWING TITLE: 380 STANDARD BATTERY CHARGER SYSTEM | This document discloses information for which HUNTER MARINE CORP. has proprietary rights. |
| DRAWING NO. 3808063F-4 | REVISION NO. NONE |
| DRAWN BY: | DATE: |

HUNTER

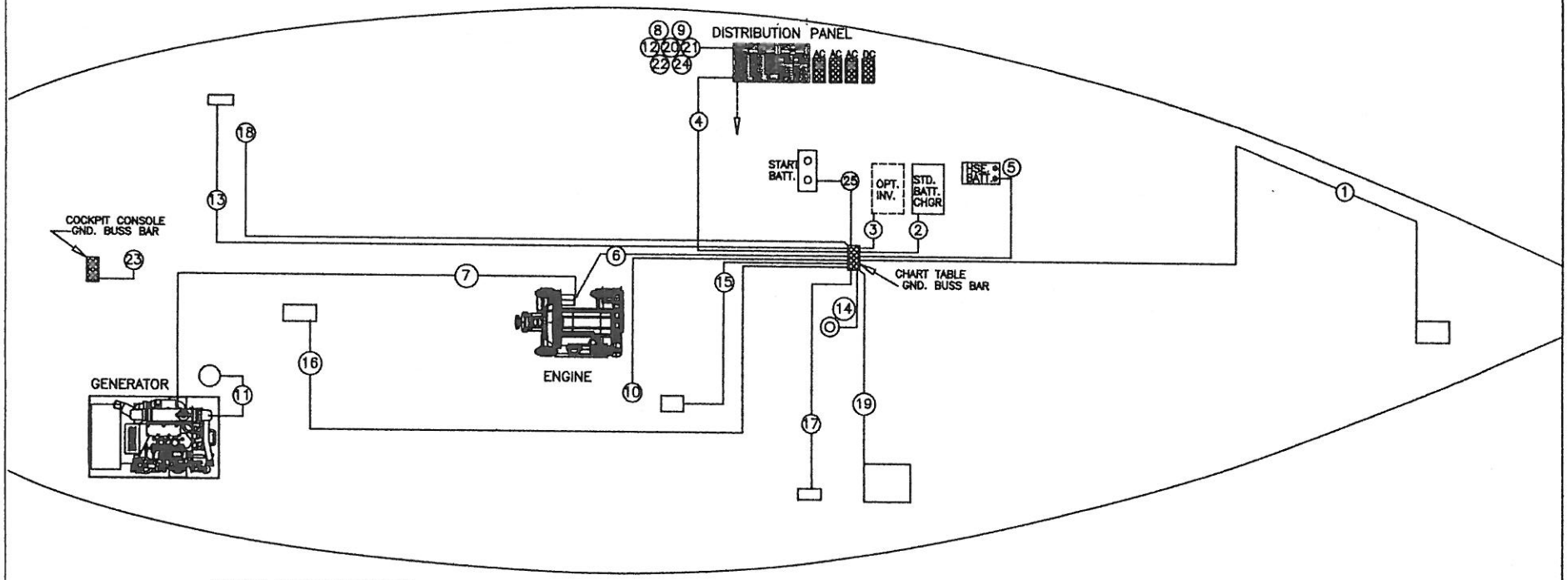


GROUND WIRE/CABLE SPECS:

1. WINDLASS (OPTIONAL).....2ga. WIRE
2. STANDARD BATTERY CHARGER.....8ga. WIRE
3. OPTIONAL INVERTER.....2/0 CABLE
4. PANEL GND. TO BUSS BAR.....6ga. WIRE
5. HOUSE BATT. GND'S TO BUSS BAR.....2/0 CABLE
6. ENGINE GND. TO BUSS BAR.....2/0 CABLE
7. GENERATOR (OPTIONAL) GND. TO ENGINE.....2/0 CABLE
8. TO PORT CTSY LIGHTS.....16ga. WIRE
9. ALL CABIN LIGHTS.....16ga. WIRE
10. OPTIONAL ELEC. HALYARD.....2 ga. WIRE
11. GENERATOR BLOWER (OPTIONAL).....12ga. WIRE
12. STARBOARD CTSY. LIGHTS.....16ga. WIRE
13. MACERATOR.....10ga. WIRE

ALL WIRES NOTED BELOW ARE (BLACK) GROUND

14. BILGE PUMP.....12ga. WIRE
15. SHOWER SUMP.....12ga. WIRE
16. OPTIONAL AUTO PILOT.....8ga. WIRE
17. WATER PRESSURE PUMP.....12ga. WIRE
18. TANK SEND UNIT.....16ga. WIRE
19. REFRIGERATION.....10ga. WIRE
20. STEREO.....16ga. WIRE
21. L.P.G. SOLENOID.....16ga. WIRE
22. INSTRUMENTS.....MANUF. SUPPLIED CABLE
23. VHF RADIO.....16ga. WIRE
24. ANC./STEAM./DECK/RUNNING LIGHTS.....16ga. WIRE
25. START BATTERY.....2/0 CABLE

NOTE: WIRE RUNS & COMPNTS. ARE SHOWN IN SCHAMATIC FORM FOR CLARITY

| | |
|---|---|
| DRAWING TITLE: 380 D.C. GROUNDING SYSTEM LAYOUT | This document discloses information for which HUNTER MARINE CORP. has proprietary rights. |
| DRAWING NO. 3808064A-2 | REVISION NO. NONE |
| DRAWN BY ENGINEERING DEPT. | DATE 12/11/97 |

HUNTER

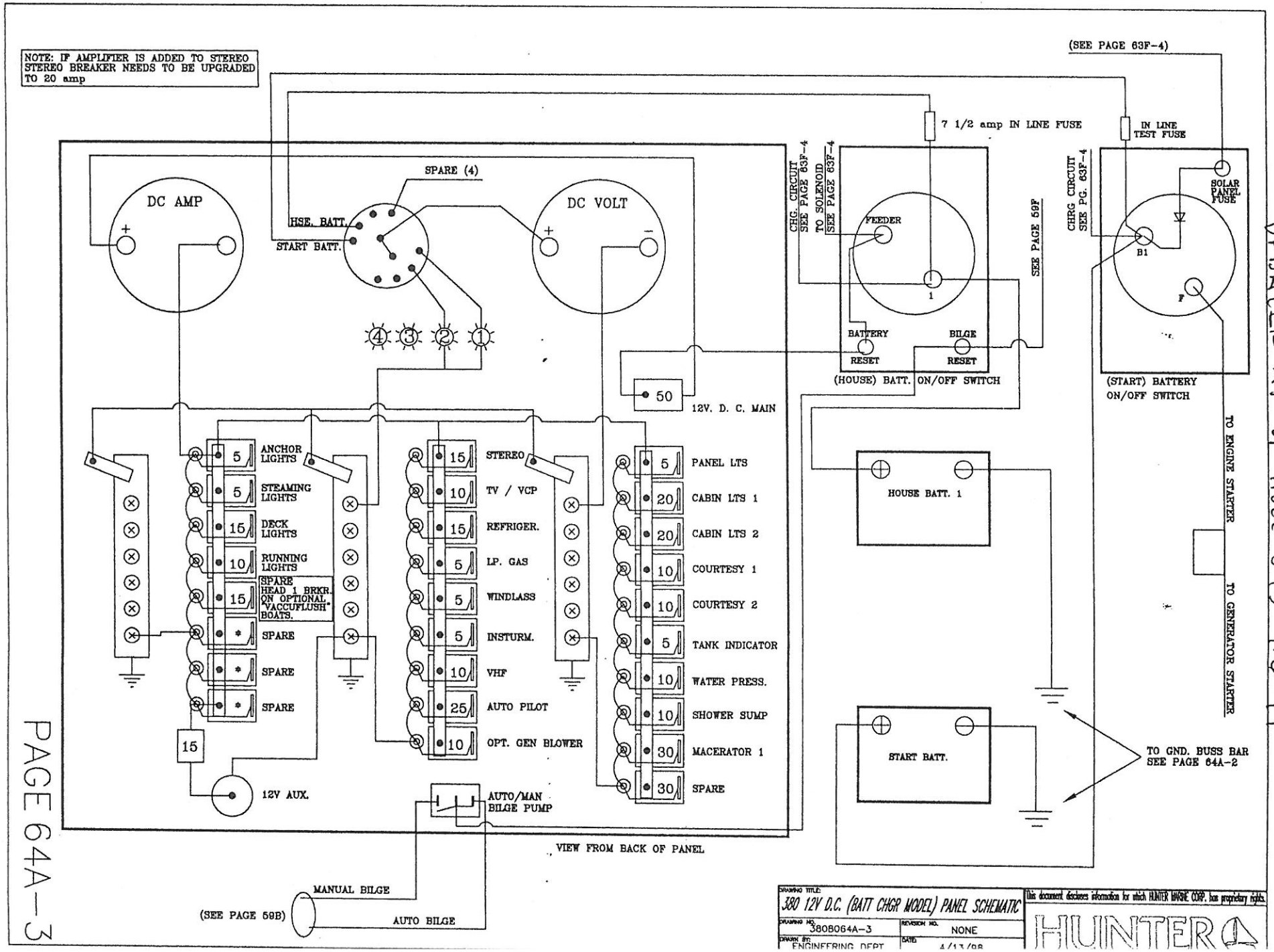


UPDATED AS OF HULL #43 1.4.99

PAGE 64A-3

# H380 POWER SYSTEMS OPERATION PROCEDURES

| OWER SOURCE: | TO OPERATE: |
|---|---|
| D.C. MAIN | **STD. BATTERY CHARGER MODEL:** TURN BATTERY SWITCH (LOCATED UNDER CHART TABLE) TO THE "ON" POSITION, THEN TURN ON "D.C. MAIN" BREAKER. ON D.C. SIDE OF MAIN DISTRIBUTION PANEL.<br>**IF NO POWER:** CHECK 50a. RESET ON "HOUSE" BATTERY SWITCH PANEL AND/OR BATTERY CONNECTIONS IF NECESSARY. |
| D.C. MAIN | **OPTIONAL INVERTER MODEL:** TURN ON "D.C. MAIN" BRKR. ON D.C. SIDE OF MAIN DISTRIBUTION PANEL. IT IS NOT NECESSARY TO TURN ON THE HOUSE BATTERY ON/OFF SW. TO THE "ON" POSITION, **THIS PORTION OF THE HOUSE BATTERY ON/OFF SW. IS FOR THE CHARGING/INVERTING SYSTEM (AND ISOLATION OF) ONLY.** IT IS NECES. HOWEVER TO TURN ON EITHER THE HOUSE BATTERY BREAKER LOCATED ON THE BOTTOM OF THE HSE. BATTERY ON/OFF SW. PANEL TO PROVIDE POWER TO D.C. PANEL FRO THE HOUSE BATT. (#1=HOUSE BATTERY #1)<br>**IF NO POWER: CHECK 300 amp IN LINE FUSE AT HOUSE BATTERY IN HOUSE BATTERY COMPARTMENT, AND/OR BATTERY CONNECTIONS IF NECESSARY.** |
| SHORE POWER "A" | 1. CONNECT SHORE POWER CABLE #1, TO SUPPLY POWER TO "A" SIDE OF A.C. POWER MAIN DISTRIBUTION PANEL<br>2. TURN ON MAIN BREAKER ON SHORE POWER "A" SIDE OF PANEL<br>3. "A" SIDE OF A.C. POWER MAIN DISTRIBUTION PANEL SHOULD NOW BE OPERABLE (NOTE: APPROX. 15 SECOND DELAY ON OPT. INV. MODELS)<br>**IF NO POWER TO "A" SIDE OF PANEL CHECK THE FOLLOWING:**<br>**1. BREAKER AT DOCKSIDE POWER SUPPLY BOX**<br>**2. BREAKER #1 INSIDE PORT COCKPIT SEAT LOCKER** |
| SHORE POWER "B"<br><br>NOTE: | 1. CONNECT SHORE POWER CABLE #2, TO SUPPLY POWER TO "B" SIDE OF A.C. POWER MAIN DISTRIBUTION PANEL<br>2. TURN ON MAIN BREAKER ON SHORE POWER "B" SIDE OF PANEL<br>3. "B" SIDE OF A.C. POWER MAIN DISTRIBUTION PANEL SHOULD NOW BE OPERABLE<br>**IF NO POWER TO "B" SIDE OF PANEL CHECK THE FOLLOWING:** **NOTE: #2 SHORE POWER IS SUPPLIED WITH OPTIONAL AIR COND. EQUIPPED MODEL**<br>**1. BREAKER AT DOCKSIDE POWER SUPPLY BOX**<br>**2. BREAKER #2 INSIDE PORT COCKPIT SEAT LOCKER**<br>THE OPT.AIR COND IS POWERED BY THE "SHORE POWER B" CABLE OR THE OPT. GENERATOR. **NOTE: IF ANY OTHER APPLIANCES ARE TO BE USED WITH AIR COND RUNNING WHEN ON SHORE POWER BOTH "SHORE POWER A" AND "SHORE POWER B" CABLES MUST BE HOOKED UP.** |
| OPTIONAL INVERTER<br>WHEN IN INVERT MODE (CONVERTS 12V.D.C. TO 110V.A.C.) | 1 TURN THE HOUSE BATTERY SELECTOR SWITCH UNDER CHART TABLE TO THE "ON" POSITION<br>2. TURN THE INVERTER REMOTE SW. (LOCATED AT INB. END OF CHART SEAT) TO THE "ON" POSITION<br>3. TURN ON DESIRED BREAKER (EX. OUTLETS) ON "A" SIDE OF A.C. MAIN DISTRIBUTION PANEL<br>NOTE: IT TAKES 10D.C. AMPS TO CREATE 1A.C. AMP, IF THE BATTERY VOLTAGE DROPS BELOW 10.5V. THE INVERTER WILL AUTOMATICALLY SHUT DOWN. (SEE "SEL. SW" & "METERS" ON PAGE 63A-7) **ALSO THE OUTPUT OF THE INVERTER IS NOT CAPABLE OF POWERING THE WATER HEATER OR AIR COND. SYSTEM**, THE WATER HEATER IS POWERED BY "SHORE POWER A" CABLE OR OPT. GENERATOR. |
| POWERS "A" SIDE OF A.C. PANEL ONLY WHEN INVERTING | **TO POWER D.C. SIDE OF PANEL AND "A" SIDE OF A.C. PANEL SIMULTANEOUSLY USING INVERTER:**<br>1. TURN ON D.C. MAIN BREAKER ON D.C. SIDE OF MAIN DISTRIBUTION PANEL<br>2. TURN THE SELECTOR SWITCH TO THE "ON" POSITION |
| USED WHEN NO SHORE POWER OR GEN.POWER BEING USED. | 3. TURN INVERTER REMOTE SWITCH TO THE "ON" POSITION<br>THIS PROCEDURE ALLOWS INVERTER TO SUPPLY 110V.A.C. POWER TO "A" SIDE OF A.C. PANEL BY DRAWING POWER FROM HOUSE BATTERY<br>(THIS APPLIES WHEN THERE IS NO SHORE OR GENERATOR POWER BEING SUPPLIED TO PANEL) |
| UILT IN INVERTER-ANSFER SWITCH. | THE INVERTER AUTO. TRANSFERS SHORE POWER TO THE A.C. PANEL WHEN "SHORE POWER A" CABLE CONNECTED AND DOCKSIDE POWER PRESENT AT A.C. PANEL BYPASSING THE INVERT MODE CAPABILITIES. |
| OPTIONALGENERATOR | 1.TURN (START) BATTERY SW. (LOCATED UNDER CHART TABLE) TO THE "ON" POSITION<br>2. CHECK SEA STRAINER AND OPEN RAW WATER SEACOCK. SEE PAGE 60 FOR LOCATION<br>3. START GENERATOR (FOLLOW STARTING INSTRUCTIONS PROVIDED IN THE "GENERATOR MANUAL")<br>3. RAISE SLIDE BAR ON "A" SIDE OF A.C. PANEL AND TURN GENERATOR BREAKER TO THE "ON" POSITION<br>4. TO POWER "B" SIDE OF A.C. PANEL (TO USE AIR COND'S) RAISE SLIDE BAR ON "B" SIDE OF A.C. PANEL AND TURN PARALLEL BREAKER TO THE "ON " POSITION |

# H380 BATTERY CHARGING SYSTEMS OPERATION PROCEDURES

| | |
|---|---|
| STD. BATT. CHARGER | 1. CONNECT SHORE POWER CABLE #1 TO POWER "A" SIDE OF A.C. POWER MAIN DISTRIBUTION PANEL AND TURN ON "SHORE POWER A" MAIN BREAKER<br>2. TURN "BATTERY CHARGER" BREAKER (LOCATED ON "A" SIDE OF A.C. PANEL) TO THE "ON" POSITION<br>NOTE: **IT IS NOT NECESSARY** TO TURN ON THE "HOUSE" OR THE "START" BATTERY SWITCHES TO PROVIDE CHARGING POWER TO THE HOUSE & START BATTERIES. |
| ENGINE ALTERNATOR | 1. TURN (START) BATTERY SELECTOR SWITCH TO THE "ON" POSITION<br>2. CHECK SEA STRAINER & OPEN RAW WATER SEACOCK. SEE PAGE 60 FOR LOCATION<br>3. START SHIP'S ENGINE (FOLLOW STARTING INSTRUCTIONS IN THE "ENGINE MANUAL")<br>4. TURN (HOUSE) BATTERY SWITCH TO THE "ON" POSITION |
| OPTIONAL INVERTER<br>INVERTER HAS A BUILT IN AUTO. CHARGING SYSTEM | 1. CONNECT SHORE POWER CABLE #1 TO POWER "A" SIDE OF A.C. POWER MAIN DISTRIBUTION PANEL AND TURN ON "SHORE POWER A" MAIN BREAKER<br>2. TURN INVERTER REMOTE SWITCH TO THE "OFF" POSITION<br>3. TURN HOUSE BATTERY ON/OFF SWITCH TO THE "ON" POSITION<br>NOTE: **IT IS NOT NECESSARY** TO TURN ON THE "START" BATTERY SWITCH TO PROVIDE CHARGING POWER TO THE START BATTERY.<br>NOTES: **WHEN LEAVING BOAT UNATTENDED, BE SURE INVERTER REMOTE SWITCH IS IN THE "OFF" POSITION,** THIS WAY IF SHORE POWER IS LOST FOR ANY REASON, THIS WILL PREVENT THE INVERTER FROM CONVERTING 12V.D.C. TO A.C. VOLTAGE CAUSING HOUSE BATTERY TO BE DRAINED.<br>WHEN THE INVERTER REMOTE SWITCH IS IN THE "OFF" POSITION THE INVERTER AUTOMATICALLY GOES INTO CHARGE MODE<br>INVERTER CHARGE MODE WORKS ONLY WHEN THERE IS POWER TO THE "A" SIDE OF THE A.C. PANEL |
| OPT. GENERATOR | 1. TURN (START) BATTERY SWITCH TO THE "ON" POSITION<br>2. CHECK SEA STRAINER & OPEN RAW WATER SEACOCK SEE PAGE 60 FOR LOCATION<br>3. START GENERATOR (FOLLOW STARTING INSTRUCTIONS IN THE "GENERATOR MANUAL"<br>4. **ON STD. BATTERY CHARGER MODEL:**TURN ON THE "GENERATOR" MAIN BREAKER ON THE A.C. SIDE OF MAIN DISTRIBUTION PANEL<br>TURN ON "BATTERY CHARGER" BREAKER ON THE "A" SIDE OF A.C. PANEL. IT IS **NOT** NECESSARY TO TURN ON THE HOUSE BATTERY SW.<br>5. **ON OPT. INVERTER MODEL:** TURN THE INVERTER REMOTE SWITCH TO THE "OFF" POSITION, AND THE HSE. BATTERY ON/OFF SWITCH TO THE "ON" POSITION. |

(NOTE: OVERSEAS MODELS ARE 220V.A.C. INSTEAD OF 110V.A.C.)
SEE DISTRIBUTION PANEL FOLLOWING PAGE

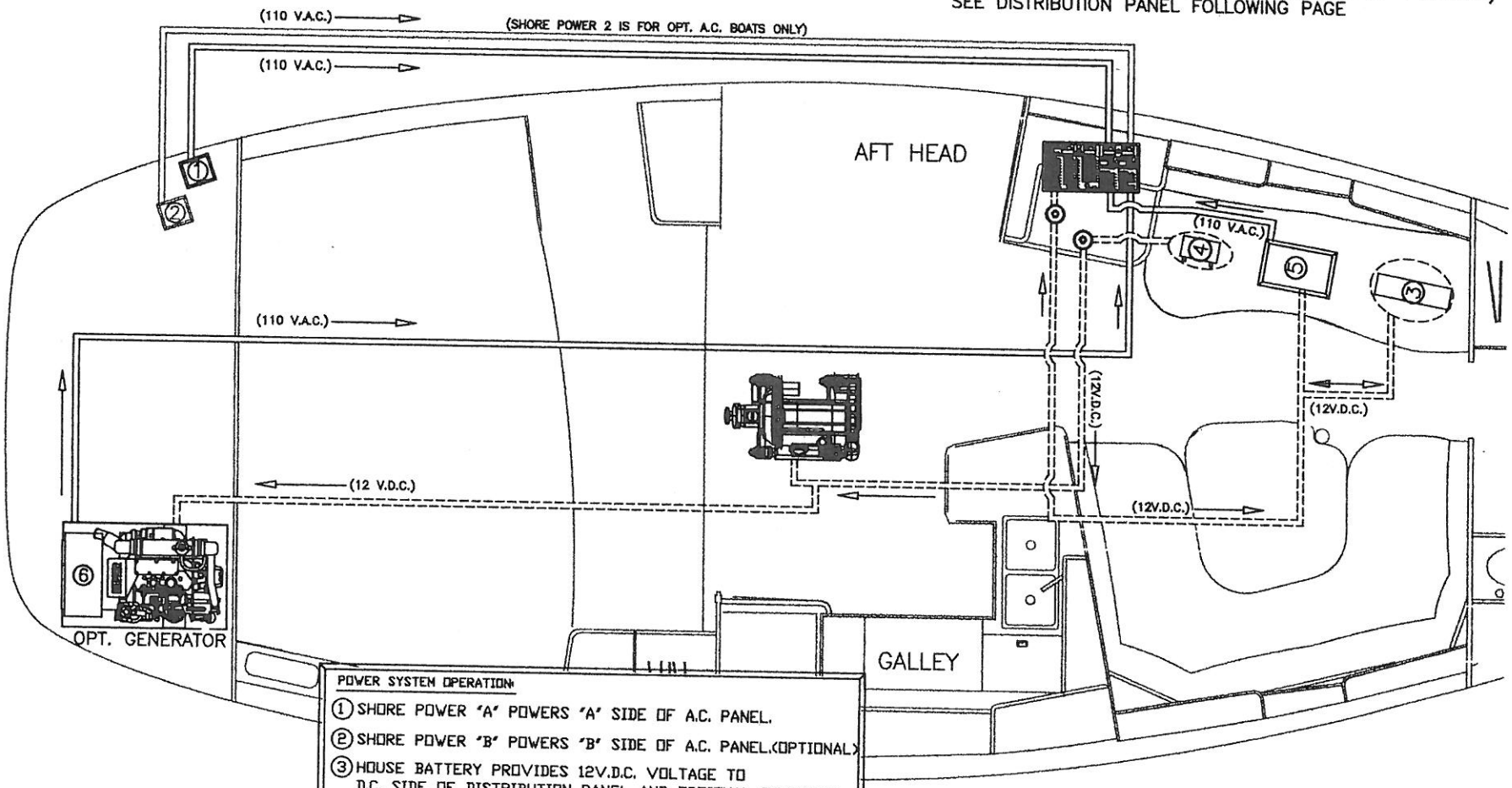


POWER SYSTEM OPERATION:

1. SHORE POWER 'A' POWERS 'A' SIDE OF A.C. PANEL.
2. SHORE POWER 'B' POWERS 'B' SIDE OF A.C. PANEL.(OPTIONAL)
3. HOUSE BATTERY PROVIDES 12V.D.C. VOLTAGE TO D.C. SIDE OF DISTRIBUTION PANEL AND OPTIONAL INVERTER.
4. START BATTERY PROVIDES 12 V.D.C. POWER TO ENGINE & GEN. STARTERS. (NOTE: ISOLATOR PREVENTS OPT. INVERTER FROM DRAWING POWER FROM START BATTERY.
5. OPT. INVERTER CONVERTS 12 V.D.C. TO A.C. VOLTAGE AND POWERS 'A' SIDE OF A.C. PANEL ONLY. (WITH THE EXCEPTION OF THE WATER HEATER)
6. OPT. GENERATOR PROVIDES A.C. POWER TO BOTH 'A' & 'B' SIDES OF PANEL WHEN GENERATOR AND PARALLEL BREAKERS ARE IN THE 'ON' POSITION WHILE GENERATOR RUNNING.

⊙ = BATTERY SELECTOR SWITCHES

→ = POWER FLOW DIRECTION

========= = 12 V.D.C.

═══════ = 110 V.A.C. (220 V.A.C. OVERSEAS MODELS)

NOTE: THIS LAYOUT IS INTENDED TO PROVIDE A BASIC UNDERSTANDING OF THE VARIOUS POWER SYSTEMS ONLY. IT IS NOT A SCHEMATIC! SEE FOLLOWING PAGES FOR MORE DETAILED INFO. SCHEMATICS, ETC.

DRAWING TITLE: 380 BASIC POWER SYSTEM LAYOUT

DRAWING NO. 3808063A-3 | REVISION NO. NONE

DRAWN BY: ENGINEERING DEPT. | DATE: 7/10/00

This document discloses information for which HUNTER MARINE CORP. has proprietary rights.

HUNTER

① SHORE POWER "A" TO "A" SIDE OF A.C. PANEL
② SHORE POWER "B" TO "B" SIDE OF A.C. PANEL
③ HOUSE BATTERY "1" TO D.C. SIDE OF PANEL
④ OPTIONAL INVERTER TO "A" SIDE OF A.C. PANEL
⑤ OPTIONAL GENERATOR POWER TO "A" AND "B" SIDE OF A.C. PANEL

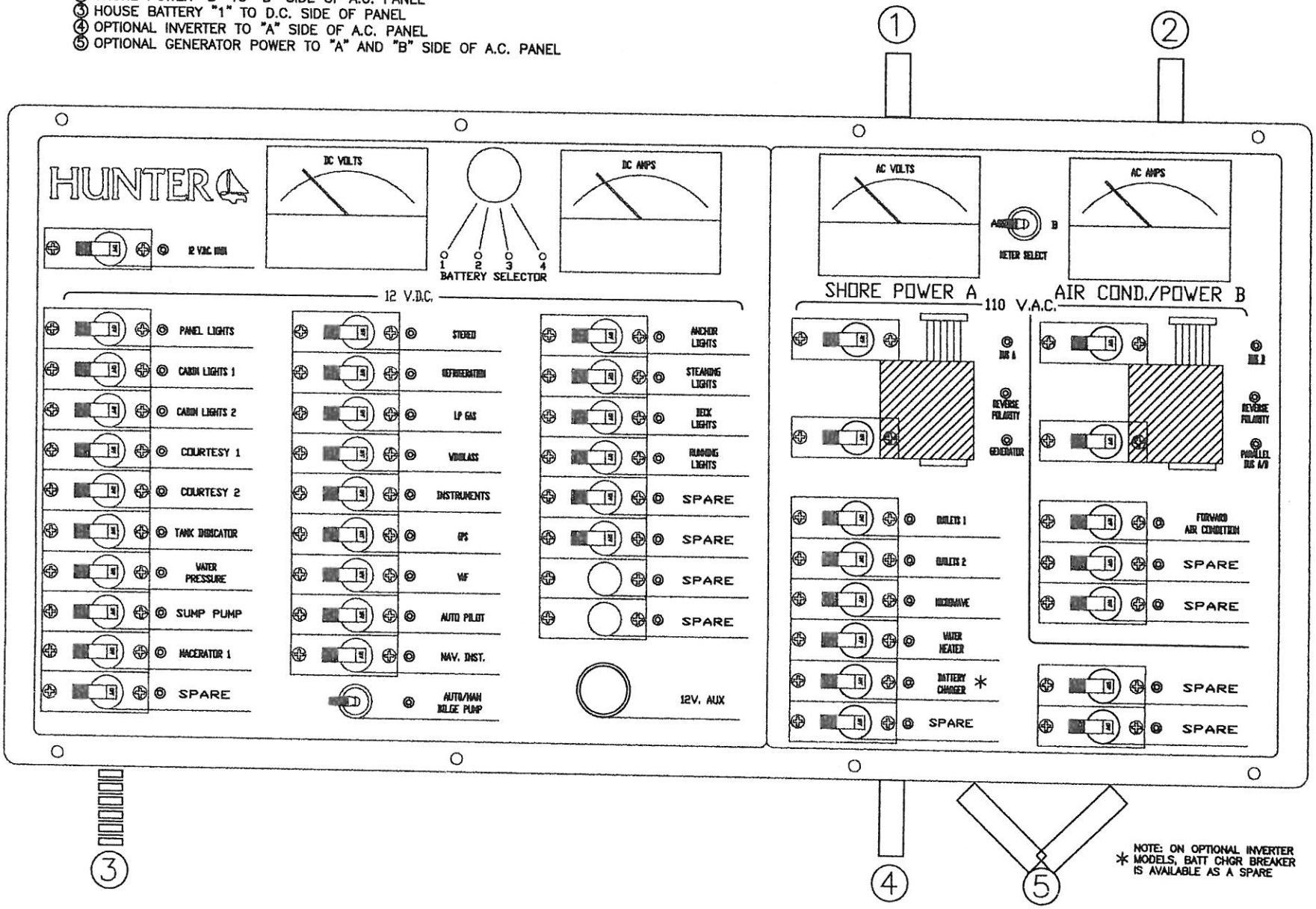


* NOTE: ON OPTIONAL INVERTER MODELS, BATT CHGR BREAKER IS AVAILABLE AS A SPARE

SEE PAGES 63A-7 & 8 FOR BREAKER DESCRIPTIONS

DRAWING TITLE: 380 MAIN DISTRIBUTION PANEL LAYOUT

DRAWING NO. 3808063A-4 | REVISION NO. NONE

DRAWN BY ENGINEERING DEPT | DATE 3/10/08

This document discloses information for which Hunter Marine Corp. has proprietary rights.

HUNTER

(NOTE: OVERSEAS MODELS ARE 220V.A.C. INSTEAD OF 110V.A.C.)

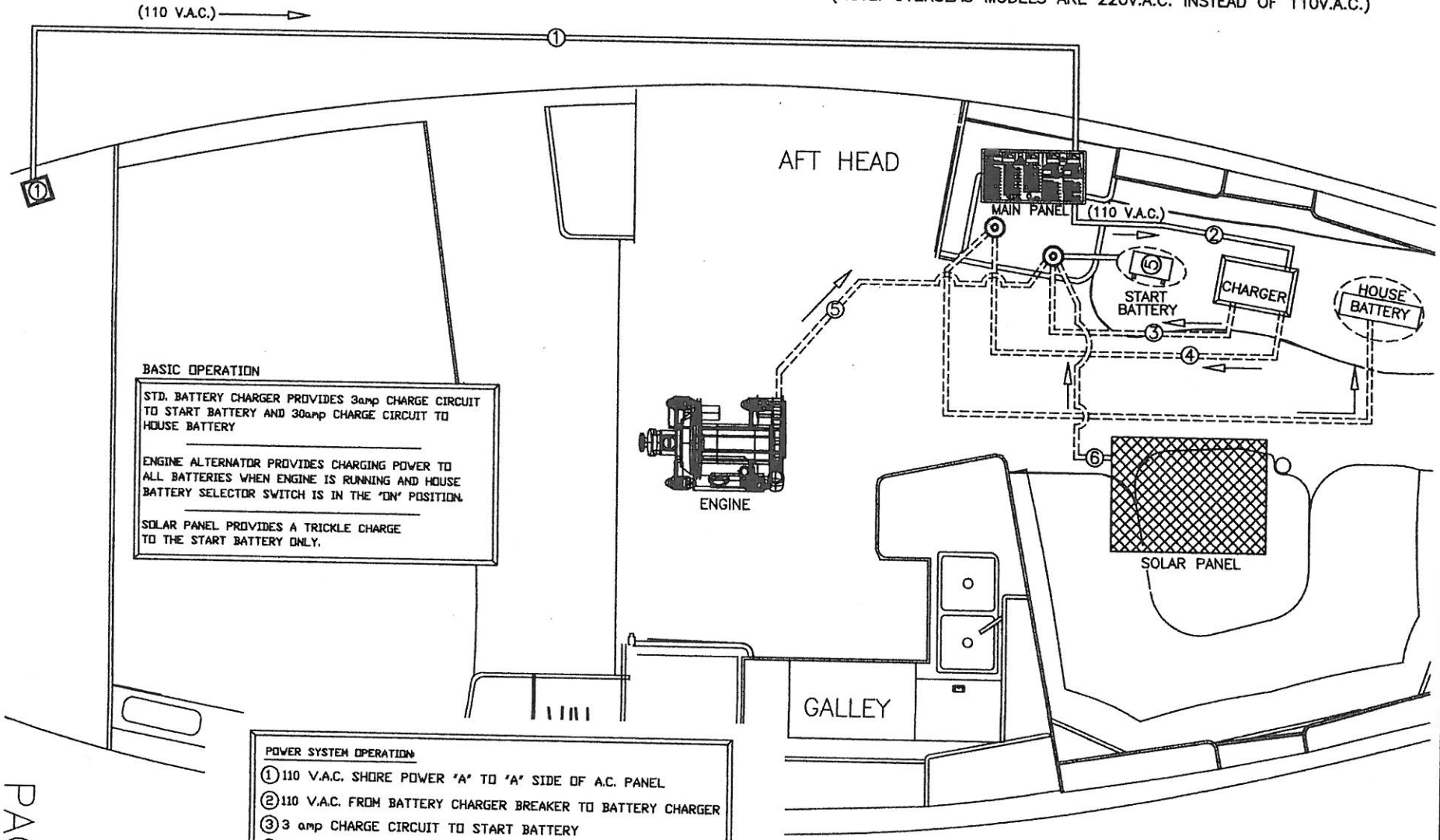


BASIC OPERATION

STD. BATTERY CHARGER PROVIDES 3amp CHARGE CIRCUIT TO START BATTERY AND 30amp CHARGE CIRCUIT TO HOUSE BATTERY

ENGINE ALTERNATOR PROVIDES CHARGING POWER TO ALL BATTERIES WHEN ENGINE IS RUNNING AND HOUSE BATTERY SELECTOR SWITCH IS IN THE 'ON' POSITION.

SOLAR PANEL PROVIDES A TRICKLE CHARGE TO THE START BATTERY ONLY.

POWER SYSTEM OPERATION

1. 110 V.A.C. SHORE POWER 'A' TO 'A' SIDE OF A.C. PANEL
2. 110 V.A.C. FROM BATTERY CHARGER BREAKER TO BATTERY CHARGER
3. 3 amp CHARGE CIRCUIT TO START BATTERY
4. 30amp CHARGE CIRCUIT TO HOUSE BATTERIES
5. ENGINE ALTERNATOR CHARGE CIRCUIT TO 'ALL' BATERIES
6. TRICKLE CHARGE CIRCUIT FROM SOLAR PANEL TO START BATTERY

◎ = BATTERY SELECTOR SWITCHES

→ = POWER FLOW DIRECTION

======= = CHARGE CIRCUITS

═══ = 110 V.A.C. (220 V.A.C. OVERSEAS MODELS)

NOTE: THIS LAYOUT IS INTENDED TO PROVIDE A BASIC UNDERSTANDING OF THE VARIOUS POWER SYSTEMS ONLY. IT IS NOT A SCHEMATIC! SEE FOLLOWING PAGES FOR MORE DETAILED INFO. SCHEMATICS, ETC.

| | |
|---|---|
| DRAWING TITLE: 380 CHARGING SYSTEM LAYOUT W/ STD. BATT. CHARGER | This document discloses information for which HUNTER MARINE CORP. has proprietary rights. |
| DRAWING NO. 3808063A-5 | REVISION NO. NONE |
| DRAWN BY: ENGINEERING DEPT. | DATE: 3/19/98 |

HUNTER

(NOTE: OVERSEAS MODELS ARE 220V.A.C. INSTEAD OF 110V.A.C.)
SINCE INVERTER IS HARDWIRED TO PANEL BATT. CHGR. BREAKER IS AVAIL. AS A SPARE

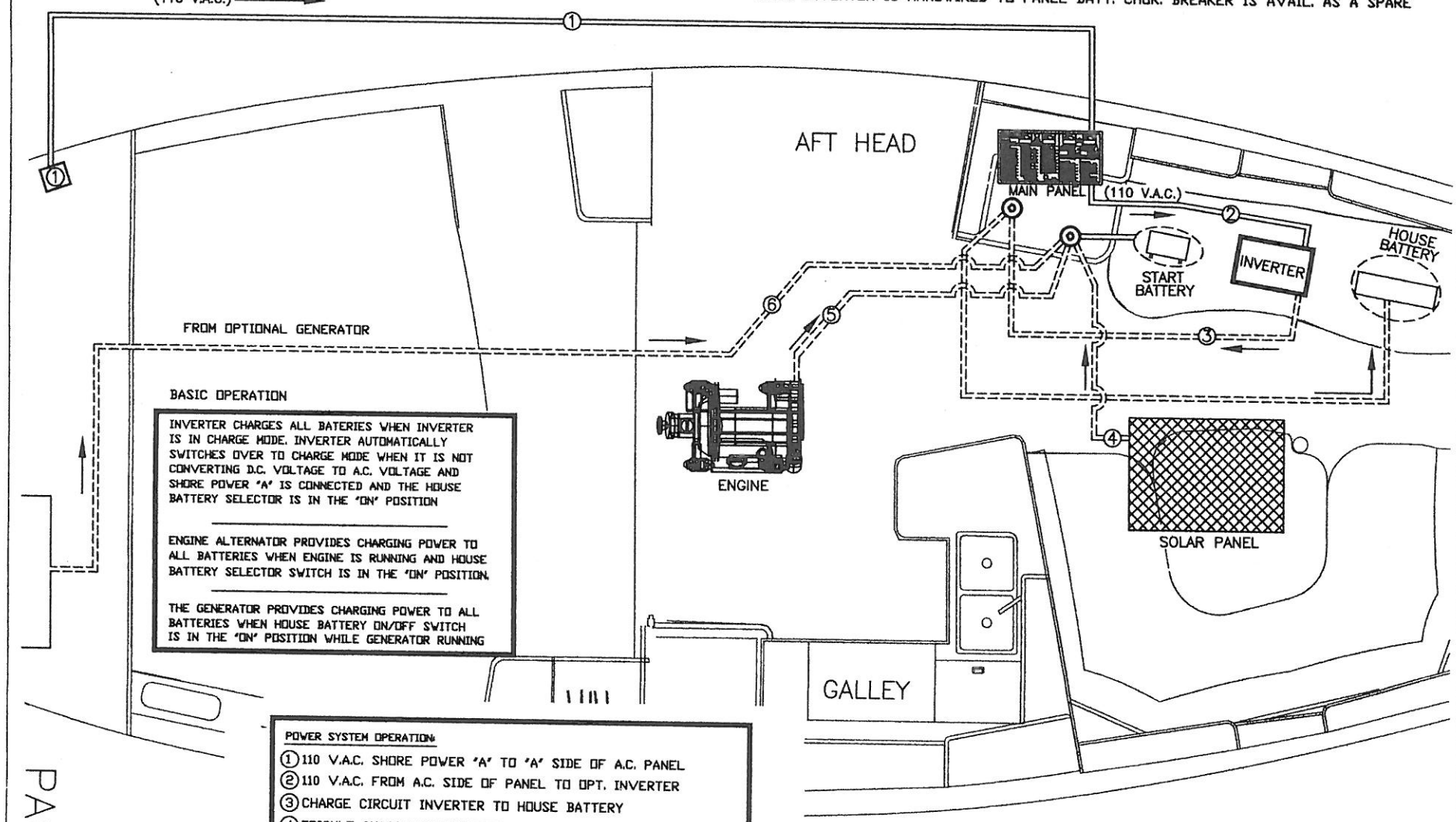


BASIC OPERATION

INVERTER CHARGES ALL BATERIES WHEN INVERTER IS IN CHARGE MODE. INVERTER AUTOMATICALLY SWITCHES OVER TO CHARGE MODE WHEN IT IS NOT CONVERTING D.C. VOLTAGE TO A.C. VOLTAGE AND SHORE POWER 'A' IS CONNECTED AND THE HOUSE BATTERY SELECTOR IS IN THE 'ON' POSITION

ENGINE ALTERNATOR PROVIDES CHARGING POWER TO ALL BATTERIES WHEN ENGINE IS RUNNING AND HOUSE BATTERY SELECTOR SWITCH IS IN THE 'ON' POSITION.

THE GENERATOR PROVIDES CHARGING POWER TO ALL BATTERIES WHEN HOUSE BATTERY ON/OFF SWITCH IS IN THE 'ON' POSITION WHILE GENERATOR RUNNING

POWER SYSTEM OPERATION:

1. 110 V.A.C. SHORE POWER 'A' TO 'A' SIDE OF A.C. PANEL
2. 110 V.A.C. FROM A.C. SIDE OF PANEL TO OPT. INVERTER
3. CHARGE CIRCUIT INVERTER TO HOUSE BATTERY
4. TRICKLE CHARGE CIRCUIT FROM SOLAR PANEL TO START BATTERY
5. ENGINE ALTERNATOR CHARGE CIRCUIT TO 'ALL' BATTERIES
6. GENERATOR CHARGE CIRCUIT TO 'ALL' BATTERIES

⊙ = BATTERY SELECTOR SWITCHES
→ = POWER FLOW DIRECTION
======= = CHARGE CIRCUITS
═══════ = 110 V.A.C. (220 V.A.C. OVERSEAS MODELS)

NOTE: THIS LAYOUT IS INTENDED TO PROVIDE A BASIC UNDERSTANDING OF THE VARIOUS POWER SYSTEMS ONLY, IT IS NOT A SCHEMATIC! SEE FOLLOWING PAGES FOR MORE DETAILED INFO. SCHEMATICS, ETC.

| | |
|---|---|
| DRAWING TITLE: 380 OPT. INVERTER/GENERATOR CHARGING SYSTEM LAYOUT | This document discloses information for which HUNTER MARINE CORP. has proprietary rights. |
| DRAWING NO. 3808063A-6 | REVISION NO. NONE |
| DRAWN BY ENGINEERING DEPT. | DATE 3/20/98 |

HUNTER

## *H380 12 V.D.C. DISTRIBUTION PANEL*

| BREAKER | DESCRIPTION |
|---|---|
| 12 V. D.C. MAIN | SUPPLIES 12 V.D.C. POWER TO ALL BREAKERS ON D.C. SIDE OF PANEL. |
| PANEL LIGHTS | ILLUMINATES BOTH A.C. & D.C. SIDES OF THIS PANEL FOR NIGHT USE |
| CABIN LIGHTS 1 | SUPPLIES POWER TO ALL OVERHEAD LIGHTS FROM MAIN CABIN FWD. INCLUDING THE MAP LIGHT |
| CABIN LIGHTS 2 | SUPPLIES POWER TO CABIN LIGHTS IN THE GALLEY, AFT HEAD, AND AFT STATEROOM. (NOTE: CABIN LIGHTS ARE CONTROLLED BY THEIR OWN INDEPENDENT SWITCH.) |
| COURTESY 1 | SUPPLIES POWER TO **COCKPIT AND ENGINE BOX COURTESY LIGHTS** |
| COURTESY 2 | SUPPLIES POWER TO THE COURTESY LIGHTS IN THE SHIP'S HEADLINER |
| TANK INDICATOR | SUPPLIES POWER TO WASTE AND WATER TANK GUAGES |
| WATER PRESSURE | SUPPLIES POWER TO FRESH WATER PUMP TO PRESSURIZE WATER SYSTEM. |
| SHOWER SUMP | SUPPLIES POWER TO SHOWER SUMP BOX. (SELF CONTAINED FLOAT SWITCH IN SUMP ACTIVATES PUMP INSIDE SUMP BOX. (SEE PAGE 59 FOR SUMP LOCATION) |
| MACERATOR 1 | SUPPLIES POWER TO MACERATOR (LOCATED INSIDE PT AFT SWIM LOCKER), **NOTE: THESE DEVICES ARE USED FOR DIRECT OVERBOARD DISCHARGE OF RAW SEWAGE, BE AWARE OF YOUR LOCAL BOATING REG. BEFORE USING.** |
| SPARE | ***SEE NOTATION BELOW** |
| STEREO | SUPPLIES POWER TO STEREO UNIT |
| REFRIGERATION | SUPPLIES POWER TO REF. COMPRESSOR, ADJUST THERMOSTATS INSIDE FRIDGE/FREEZER TO DESIRED TEMP. |
| L. P. GAS | SUPPLIES POWER TO L.P. GAS SWITCH AT GALLEY. SEE "L.P. GAS MANUAL" FOR OPER. & SAFETY INST. |
| WINDLASS | SUPPLIES POWER TO UP/DOWN CONTROLS AT ANCHOR WELL. **NOTE: BECAUSE THE WINDLASS DRAWS IT'S POWER FROM THE START BATTERY, IT IS GOOD PRACTICE TO START THE SHIPS ENGINE PRIOR TO OPERATING WINDLASS TO PREVENT BATTERY DRAIN. (IF NO POWER CHECK RESET ON REMOTE PANEL @ NAV STATION)** |
| INSTRUMENTS | SUPPLIES POWER TO DEPTH, & SPEED REPEATERS LOCATED ON HELM CONSOLE. |
| G.P.S. | THIS BREAKER PROVIDED FOR AN OPTIONAL GLOBAL POSITIONING SYSTEM. (WITH THE EX. OF CERTAIN CE MODELS) |
| VHF | SUPPLIES POWER TO THE VHF RADIO |
| AUTOPILOT | THIS BREAKER PROVIDED FOR AN OPTIONAL AUTOPILOT SYSTEM. |
| NAV. INST. | THIS BREAKER PROVIDED FOR OPTIONAL NAVIGATION INSTRUMENTS . (EX: RADAR) |
| BILGE PUMP | TOGGLE SWITCH STAYS IN THE "AUTO" POSITION, THIS ALWAYS FEEDS POWER TO THE FLOAT SWITCH (AS LONG AS BATTERY IS CONNECTED AND HAS AMPLE CHARGE). FOR MANUAL USE, PUSH SWITCH TO "MANUAL" ILLUMINATED LIGHT INDICATES POWER TO PUMP, THUS PUMP SHOULD BE RUNNING. PRIOR TO LEAVING VESSEL "MANUALLY" TEST PUMP AND CHECK BATTERY LEVEL. SEE BATTERY SELECT SWITCH BELOW. |
| ANCHOR LIGHT | SUPPLIES POWER TO 360 DEGREE LIGHT AT TOP OF MAST, USE WHEN ANCHORED AT NIGHT. |
| STEAMING LIGHT | SUPPLIES POWER TO STEAMING LIGHT LOCATED ON FWD. SIDE OF MAST APPROXIMATELY AT THE HEIGHT OF THE LOWER SPREADERS. USE AT NIGHT (WITH RUNNING LIGHTS) WHEN VESSEL UNDERWAY BY ENGINE POWER. |
| DECK LIGHT | SUPPLIES POWER TO DECK LIGHT (IS COMBINATION WITH STEAMING LIGHT) PROVIDES LIGHT TO DECK BELOW. |
| RUNNING LIGHTS | SUPPLIES POWER TO THE BOW, STERN , & COMPASS LIGHT. USE AT NIGHT UNDER SAIL AND/OR ENGINE POWER. |
| SPARE/S | ***SEE NOTATION BELOW** |
| | |
| BATT. SEL. SW. | USE TO REVIEW STATUS OF EA. BATTERY ROTATE SWITCH TO #1 FOR HOUSE BATTERY #2 FOR START BATTERY |
| METERS | D.C. VOLTS DISPLAYS **AVAILABLE VOLTAGE** FROM SELECTED BATTERY<br>D.C. AMPS DISPLAYS **AMPERAGE BEING DRAWN** FROM SELECTED BATTERY. |
| 12V.D.C. AUX. | THIS POWER PLUG PROVIDED FOR CELLPHONE, LAPTOP COMPUTER, ETC. |
| YELLOW INDICATORS | INDICATORS ILLUMINATE WHEN 12 V.D.C. POWER PRESENT. |
| NOTES: | IF THE OPTIONAL AUTOPILOT WAS INSTALLED AT THE FACTORY, THE "INSTRUMENTS" POWER LEADS ARE WIRED TO THE AUTOPILOT BREAKER. (THIS APPLIES TO THE OPTIONAL G.P.S. AS WELL) THIS ALLOWS THESE UNITS TO WORK SIMULTANEOUSLY OFF THE AUTOPILOT BREAKER. THE BREAKER/S IN MENTION ARE NOW SPARE/S*. **SEE PAGE 64A-1 FOR BREAKER AMPERAGES. SEE NOTATION BELOW.** |
| | ***NOTE THE SPARE BREAKERS ON THIS PANEL EXIST BECAUSE OTHER MODELS MAY USE THIS SAME PANEL. FOR EXAMPLE, ON THIS PANEL, THE MACERATOR 2 BREAKER BECOMES A SPARE DUE TO THE FACT THAT THIS MODEL HAS ONLY ONE MACERATOR. BE AWARE OF THE BREAKER'S AMPERAGES TO BE SURE THAT IT IS COMPATABLE WITH ANY DEVICE THAT IS TO BE CONNECTED TO IT. (ADDITIONAL " SPARE BRKRS" LOCATION PROVIDED ONLY)** |

# 110V.A.C. (220 OVERSEAS MODELS) DISTRIBUTION PANEL

| BREAKERS | DESCRIPTION |
|---|---|
| | **"A" SIDE OF A.C. PANEL** |
| BUS "A" BREAKER | PROVIDES A.C. VOLTAGE TO THIS SIDE OF PANEL WHEN SHORE POWER CORD "A" IS CONNECTED TO OUTLET AT DOCKSIDE POWER SUPPLY. |
| GENERATOR | SUPPLIES POWER **FROM** GENERATOR TO BOTH SHORE POWER "A" AND SHORE POWER "B" (AIR COND.) SIDES OF PANEL. NOTE: TO PROVIDE POWER TO SHORE POWER "B" SIDE OF PANEL MOVE SLIDE BAR UP AND TURN ON THE PARALLEL BREAKER ON THE SHORE POWER "B" SIDE OF PANEL. |
| OUTLETS 1 | PROVIDES A.C. POWER TO THE OUTLETS ON THE PORT SIDE OF BOAT. |
| OUTLETS 2 | PROVIDES A.C. POWER TO THE OUTLETS ON THE STBD. SIDE OF BOAT. |
| MICROWAVE | SUPPLIES POWER TO OUTLET BEHIND MICRO. IN WHICH MICROWAVE IS PLUGGED INTO. |
| WATER HEATER | SUPPLIES POWER TO WATER HEATER. **BE SURE TANK IS FULL AND SYSTEM IS FREE FROM AIR BEFORE APPLYING POWER TO HEATER TO PREVENT ELEMENT BURNOUT. NOTE DO NOT TRY TO POWER WATER HEATER OFF OF THE OPTIONAL INVERTER, IT IS NOT CAPABLE OF SUPPLYING ENOUGH POWER TO POWER UNIT.** |
| BATT. CHARGER | PROVIDES POWER TO BATTERY CHARGER WHICH IN TURN PROVIDES CHARGING POWER TO BATTERIES. NOTE: IF OPTIONAL INVERTER CHOSEN THIS BREAKER IS NOT UTILIZED AND IS AVAILABLE AS A "SPARE" BREAKER. ***SEE BELOW** |
| | **"B" SIDE OF PANEL** |
| BUS "B" BREAKER | PROVIDES A.C. VOLTAGE TO THIS SIDE OF PANEL WHEN SHORE POWER CORD "B" IS CONNECTED TO OUTLET AT DOCKSIDE POWER SUPPLY. |
| PARALLEL | PROVIDES POWER FROM GENERATOR TO THIS SIDE OF PANEL.(MOVE SLIDE BAR UP TO TURN BREAKER ON.) |
| FWD AIR COND. | PROVIDES POWER TO AIR COND. UNIT (SEE "AIR COND. MANUAL" FOR OPER. INSTRUCTIONS. |
| SPARE | 15amp BREAKER MAY BE USED AS AN ACCESSORY BREAKER. ***SEE BELOW** |
| | 10amp BREAKER MAY BE USED AS AN ACCESSORY BREAKER. ***SEE BELOW** |
| | **MISC. INFO** |
| SPARE BREAKERS | ***SEE BELOW** |
| RED INDICATORS | ILLUMINATE WHEN A.C. POWER PRESENT. |
| METER SEL. SWITCH | ALLOWS VOLTAGE BEING SUPPLIED AND AMPERAGE BEING DRAWN TO BE DISPLAYED ON VOLT & AMP METERS SWITCH POSITION "A" = "A" SIDE OF PANEL. SWITCH POSITION "B" = "B" SIDE OF PANEL. |
| REV. POLARITY | IF REVERSED POLARITY INDICATOR ILLUMINATES AFTER CONNECTING SHORE POWER HAVE DOCKSIDE POWER CHECKED BY QUALIFIED PERSONELL. |
| NOTE: | SEE PAGE 63A-13 & 14 FOR BREAKER AMPERAGES |
| **SPARE BREAKERS** | **BE AWARE OF THE SPARE BREAKER'S AMPERAGE TO BE SURE THAT IT IS COMPATABLE WITH ANY DEVICE CONNECTED TO THESE BREAKERS (ADDITIONAL "SPARE BREAKER" LOCATIONS PROVIDED ONLY)** |

**NOTE: A PRUDENT MARINER REALIZES THAT THE RESOURCES TO POWER A VESSEL ARE LIMITED. WHEN USING THE INVERTER OR GENERATOR ONE SHOULD BE CONSERVATIVE AND AWARE OF THE AMOUNT OF POWER BEING SUPPLIED VERSES POWER BEING DRAWN. THIS IS ESPECIALLY IMPORTANT WHEN USING OPTIONAL INVERTER POWER. CONSULT THE "INVERTER MANUAL" FOR POWER OUTPUT CAPABILITIES.**

THIS PAGE UPDATED AS OF HULL #544 1-12-99

# 12V.D.C. SYSTEM TROUBLESHOOTING GUIDE

| | |
|---|---|
| **TO POWER D.C. PANEL:**<br>THIS IS TO POWER PANEL FOR CHARGING, SEE PAGE 63A-2 | **STD. BATTERY CHARGER MODEL** TURN (HOUSE) BATTERY SWITCH TO THE "ON" POSITION, THEN TURN ON "D.C. MAIN" BREAKER ON MAIN DIST. PANEL.<br>**IF NO POWER TO PANEL:** CHECK **"RESET"** ION (HOUSE) BATTERY SWITCH PANEL AND/OR BATT. CONNECTIONS IF NECESSARY. |
| **TO POWER D.C. PANEL:**<br>THIS IS TO POWER PANEL FOR CHARGING, SEE PAGE 63A-2 | **OPTIONAL INVERTER MODEL**, TURN ON "D.C. MAIN" BREAKER ON PANEL, IT IS **NOT** NECESSARY TO TURN ON THE HOUSE BATTERY SWITCH TO THE "ON" POSITION TO SUPPLY POWER TO D.C. PANEL<br>**IF NO POWER TO PANEL:** CHECK THE 50amp RESET **BREAKER** AND/OR THE 300 a. IN LINE FUSES AT THE HOUSE BATT OR BATT. CONNECTIONS IF NECESSARY. |

| COMPONENT | SYMPTOM | POSSIBLE SOLUTION/S |
|---|---|---|
| D.C. MAIN | NO POWER TO PANEL | SEE "TO POWER PANEL" ABOVE<br>BATTERY/S CHARGED? |
| PANEL LIGHTS | PANEL WON'T ILLUMINATE | SEE "TO POWER TO PANEL" ABOVE<br>BATTERY TERMINALS CLEAN?<br>SEEK QUALIFIED PERSONELL |
| CABIN LIGHTS | WON'T ILLUMINATE | SEE "TO POWER PANEL" ABOVE<br>BULB/S NEED REPLACING? |
| COURTESY LIGHTS (AT CRTSY. LIGHTS MAIN SALON) | WON'T ILLUMINATE | SEE "TO POWER PANEL" ABOVE<br>BULBS/S NEED REPLACING? |
| COURTESY LIGHTS ENGINE BOX COMP. COCKPIT CONSOLE | WON'T ILLUMINATE | SEE "TO POWER PANEL" ABOVE<br>PLUNGER SWITCH STUCK?<br>IS SWITCH @ CONSOLE "ON"? |
| TANK INDICATOR | TANK LEVEL GAUGES DON'T ILLUMINATE<br>TANK LEVEL DISPLAYED IS INCORRECT | SEE "TO POWER PANEL" ABOVE<br>TANK SENDING UNIT NEEDS CLEANING |
| WATER PRESSURE | NO POWER<br>CYCLES ON/OFF EXCESSIVELY | SEE "TO POWER PANEL" ABOVE<br>FAUCETS OFF? LEAK IN SYSTEM SEE PAGEC 57C-H FOR CONNECTION LOC. |
| SHOWER SUMP | WON'T PUMP WHEN SUMP BOX FILLED (PUMP WON,T QUIT RUNNING)<br>PUMP MAKES NOISE, DOESN'T PUMP<br>PUMP RUNS BUT DOESN'T PUMP | SEE "TO POWER PANEL" ABOVE<br>IS FLOAT SWITCH STUCK?<br>DEBRIS IN PUMP IMPELLER?<br>DISCHARGE HOSE CLOGGED?<br>SEACOCK DISCHARGE VALVE CLOSED? |
| MACERATOR | RUNS BUT DOESN'T DISCHARGE<br><br>PUMP MAKES NOISE, DOESN'T PUMP | IS DISCHARGE SEACOCK OPEN?<br>IS WASTE DECK FITTING SECURE, IS IT PULLING AIR THRU? IF SO REPLACE 0- RING ON CAP.<br>IS TANK VENT (HULL FITTING) CLOGGED? SEE PAGE 60 FOR LOCATIONS<br>LODGED DEBRIS, **TURN OFF POWER** TO PUMP, INSERT SCREWDRIVER INTO PUMP ARMATURE AT END OF PUMP AND TURN TO DISLODGE DEBRIS |
| STEREO | WON'T TURN ON<br>STEREO TURNS ON, NO SOUND<br>VCP WON'T PLAY | SEE "TO POWER PANEL" ABOVE<br>IS STEREO UNIT ON?<br>ARE VOLUME CONTROLS TURNED DOWN?<br>SEE VIDEO PLAYER OWNERS MANUAL |
| TV/ VCP | WON'T TURN ON<br>TV TURNS ON, NO SOUND | SEE "TO POWER PANEL" ABOVE<br>ARE TV / VCP UNITS ON?<br>ARE VOLUME CONTROLS TURNED DOWN TURNED DOWN? |
| REFRIGERATION | WON'T GET COLD<br>UNIT KEEPS TURNING OFF | SEE "TO POWER PANEL" ABOVE. IS THERMOSTATS TURNED ON? IS RAW WATER **INTAKE** VALVE CLOSED? IS SEACOCK **DISCHARGE** VALVE CLOSED? IS FILTER CLEAN? IS THRU HULL CLOGGED? SEEK QUALIFIED PERSONELL |
| L.P. GAS | NO POWER TO SWITCH AT GALLEY<br>SYSTEM TURNS ON, NO GAS PRESENT | SEE "TO POWER PANEL" ABOVE<br>IS TANK VALVE OPEN?<br>IS TANK EMPTY?<br>SEE STOVE/OVEN MANUAL |

NOTE: COMPONENT/S FAILURE COULD ALSO BE THE RESULT OF A POOR "GROUND" CONNECTION. SEE PAGE 64A-2 FOR GROUND SYSTEM LAYOUT AND GROUND STUD/BUSSBAR LOCATIONS. DUE TO VIBRATION, WEATHER CONDITIONS, ECT. OCCASIONAL INSPECTION, CLEANING AND TIGHTENING OF THESE TERMINALS (BY QUALIFIED PERSONELL) MAY BE NECESSARY.

THIS PAGE UPDATED AS OF HULL # 544 1.12.99

## 12V. D.C. SYSTEM TROUBLESHOOTING GUIDE CONT:

| COMPONENT | SYMPTOM | POSSIBLE SOLUTION/S |
|---|---|---|
| WINDLASS | UP/DOWN CONTROLS DON'T OPERATE WINDLASS | SEE "TO POWER PANEL" PREV. PAGE<br>WINDLASS SWITCH AT WINDLASS RESET PANEL ON? IS RESET TRIPPED? |
| INSTRUMENTS | REPEATERS DON'T OPERATE | SEE "TO POWER PANEL" PREV. PAGE<br>DO TRANSDUCERS NEED CLEANING?<br>SEE INSTRUMENTS MANUAL |
| VHF RADIO | WON'T OPERATE<br><br>TURNS ON, WON'T TRANSMIT/RECEIVE | SEE "TO POWER PANEL" PREV. PAGE<br>RADIO TURNED ON?<br>ANTENNA CONNECTED PROPERLY? |
| OPTIONAL AUTO PILOT | WON'T OPERATE<br>WON'T HOLD STEADY COURSE<br><br>CONSTANTLY ADJUSTING HELM | SEE "TO POWER PANEL" PREV. PAGE<br>IS THERE ANY METAL OBJECTS NEAR THE FLUX GATE COMPASS LOCATED IN THE STBD. AFT MAIN BUNK COMP?<br>SENSITIVITY SETTING SET TO HIGH, SEE "AUTO PILOT MANUAL" FOR SENS. ADJ. |
| OPTIONAL GENERATOR BLOWER | WON'T OPERATE | SEE "TO POWER PANEL" PREV. PAGE<br>IS UNIT "ON"? |
| BILGE PUMP | WON'T OPERATE AUTO OR MANUAL<br><br>PUMP MAKES NOISE, DOESN'T PUMP<br>PUMP RUNS BUT DOESN'T DISCHARGE | BATTERY LEVEL O.K.? SEE VOLT METER<br>CHECK BILGE RESET ON STRT.BATT. SEL. SWITCH PANEL UNDER CHART TABLE.<br>BATTERY CONNECTIONS GOOD?<br>DEBRIS IN PUMP IMPELLER?<br>DISCHARGE HOSE CLOGGED?<br>SEACOCK DISCHARGE VALVE CLOSED? |
| ANCHOR, STEAMING, DECK, & RUNNING LIGHTS | WON'T ILLUMINATE | SEE "TO POWER PANEL" PREV. PAGE<br>CHECK CONNECTIONS IN ACCESS PANEL TOP OF COMPRESSION POST.<br>BULBS NEED REPLACING? |
| 12 V.D.C.AUX. PLUG | NO POWER PRESENT | CHECK IN-LINE FUSE BACK OF PANEL |
| VOLT METER | NO VOLTAGE DISPLAYED | SEE "TO POWER PANEL" PREV. PAGE<br>IS HSE. BATT.ON/OFF SW. ON #1? IS THIS POSITION AVAILABLE FOR ADDITIONAL BATTERY, USE #2,3, OR 4 POSITION.<br>CK. FUSES ON HSE. BATT. ON/OFF PANEL<br>ARE BATTERY CONNECTIONS GOOD?<br>HAVE BATTERIES CHECKED<br>HAVE METER CHECKED BY QUALIFIED PERSONELL. |
| AMP METER | NO AMPERAGE DISPLAYED | IS D.C. MAIN ON?<br>IS ANYTHING IN THE 12V. SYSTEM TURNED ON & RUNNING?<br>HAVE METER CHECKED BY QUALIFIED PERSONELL. |
| SOLAR PANEL | NO OUTPUT TO BATTERY/S | CK. FUSES ON BATTERY SWITCH PANEL |

## *110V.A.C. (220V. OVERSEAS MODELS) SYSTEM TROUBLESHOOTING GUIDE*

| COMPONENT | SYMPTOM | POSSIBLE SOLUTION/S |
|---|---|---|
| SHORE POWER "A" | NO POWER TO PANEL | SEE "POWER SYSTEM OPERATIONS" PAGE 63A-2<br>CHECK DOCKSIDE BREAKER AND/OR BREAKER #1<br>LOCATED INSIDE PT. COCKPIT LOCKER.<br>CHECK "RESETS" ON (OPT.)INVERTER (SEE "INVERTER MAN.") |
| OUTLETS #1 & 2 | NO POWER | SEE "POWER SYSTEM OPERATIONS" PAGE 63A-2<br>IS OUTLET BREAKER/S ON?<br>CHECK RESET ON G.F.I. OUTLETS AT<br>GALLEY & AT NAV. STATION.<br>CHECK RESETS ON (OPT.) INVERTER (SEE "INVERTER MAN.") |
| MICROWAVE | NO POWER | IS BREAKER ON?<br>SEE "POWER SYSTEM OPERATIONS" PAGE 63A-2<br>IS MICROWAVE ON?<br>SEE "MICRO MANUAL" |
| WATER HEATER | NO POWER<br><br>WON'T HEAT WATER<br><br>WATER TOO COLD/HOT | IS BREAKER ON?<br>SEE "POWER SYSTEM OPERATIONS" PAGE 63A-2<br>CHECK "RESET" ON HEATER SEE "WATER<br>HEATER MANUAL" FOR LOCATION.<br>SEE "WATER HEATER MANUAL" FOR<br>THERMOSTAT ADJUSTMENT AND/OR<br>ELEMENT REPLACEMENT, SEEK QUALIFIED PERSONELL. |
| BATTERY CHARGER<br>(STANDARD) | NOT CHARGING BATTERY/S | IS SHORE POWER "A" ON<br>IS BATT. CHARGER BREAKER ON?<br>IS RESET TRIPPED ON HOUSE BATTERY ON/OFF PANEL<br>CHECK FUSES BEHIND HOUSE BATT. ON/OFF PANELS<br>ARE BATTERY CONNECTIONS GOOD? |
| INVERTER/BATT. CHARGER<br>(OPTIONAL)<br>(IN INVERTER MODE) | INV. NOT SUPPLYING A.C.POWER<br><br>INV. ON BUT UNABLE TO OPERATE<br>DESIRED APPLIANCE/S | IS INVERTER REMOTE SWITCH AT NAV STATION ON?<br>IS DESIRED APPLIANCE BREAKER ON?<br>IS BATTERY VOLTAGE LOW? SEE VOLTAGE<br>DISPLAY ON INVERTER REMOTE PANEL,<br>ARE YOU ASKING THE INVERTER TO POWER<br>MORE THAN IT IS CAPABLE? SEE "INVERTER<br>MANUAL" FOR INFORMATION REGARDING<br>POWER OUTPUT CAPABILITIES.<br>CHECK "RESETS ON (OPT.) INVERTER (SEE "INVERTER MAN.") |
| INVERTER/BATT. CHARGER<br>(OPTIONAL)<br>(IN CHARGING MODE) | NOT CHARGING BATTERY/S | IS SHORE POWER "A".ON?<br>SEE "POWER SYSTEM OPERATIONS" PAGE 63A-2<br>IS BATTERY SELECTOR SWITCH IN "ON" POSITION?<br>CHECK IN-LINE 300amp FUSE AT BATTERY<br>ARE BATTERY CONNECTIONS GOOD?<br>INVERTER REMOTE SWITCH SHOULD BE IN<br>THE "OFF" POSITION. (THIS IS NECESSARY IN THE<br>EVENT YOU "LOSE" SHORE POWER, THE INVERTER<br>DOESN'T GO INTO INVERT MODE CAUSING BATT./S<br>TO DRAIN IF YOU LEFT AN A.C. APPLIANCE ON.. |

THIS PAGE UPDATED AS OF 1-12-99 HULL #544

## 110V.A.C. (220V. OVERSEAS MODELS) SYSTEM TROUBLESHOOTING GUIDE CONT:

| COMPONENT | SYMPTOM | POSSIBLE SOLUTIONS |
|---|---|---|
| SHORE POWER "B" | NO POWER TO PANEL | SEE "POWER SYSTEMS OPERATION PAGE 63A-2" CHECK DOCKSIDE BREAKER AND/OR BREAKER #2 INSIDE PT. GULLWING LOCKER. |
| AIR COND. | WON'T TURN ON | IS BREAKER ON? SEE "POWER SYSTEMS OPERATION" PAGE 63A-2 SEE " AIR CONDITIONER" MANUAL |
| | TURNS ON THEN SHUTS DOWN | IS AIR COND. RAW WATER **PICK UP** SEACOCK OPEN? IF SO, IS WATER CIRCULATING? SEE PAGE 60 FOR AIR COND. DISCHARGE THRUHULL LOCATION, IF NOT IS AIR COND. PICKUP BEING RESTRICTED BY DEBRIS? IS **DISCHARGE** SEACOCK OPEN? |
| | OTHER | SEE "AIR CONDITIONER" MANUAL |
| **OPTIONAL GENERATOR (APPLIES TO BOTH "A" & "B" SIDES OF A.C. PANEL)** | | |
| GENERATOR | NO POWER TO STARTER | IS START BATT. SELECTOR SWITCH ON? |
| | RUNNING, BUT NO POWER AT PANEL. | IS "GENERATOR BREAKER" ON "A" SIDE OF PANEL ON? (MOVE SLIDE BAR UP TO TURN THIS BREAKER ON). IS "PARALLEL BREAKER" ON "B" SIDE OF PANEL ON? SEE GENERATOR MANUAL |
| | WON'T START | DID YOU FOLLOW PROPER STARTING PROCEDURE AS DESCRIBED IN THE "GENERATOR MANUAL"? DO YOU HAVE AN AMPLE AMOUNT OF DIESEL FUEL? REMEMBER THE GENERATOR FUEL PICKUP TUBE IS SHORTER THAN THE PICKUP TUBE FOR THE ENGINE, THIS PREVENTS GENERATOR FROM DRAINING TANK SINCE ENGINE POWER IS MORE IMPORTANT THAN GENERATOR POWER. REFER TO GENERATOR MANUAL FOR POSSIBLE FUSE OR RESET ON GENERATOR. |
| | GEN. STARTS THEN SHUTS DOWN | IS RAW WATER PICKUP SEACOCK OPEN, OR OBSTRUCTED? |

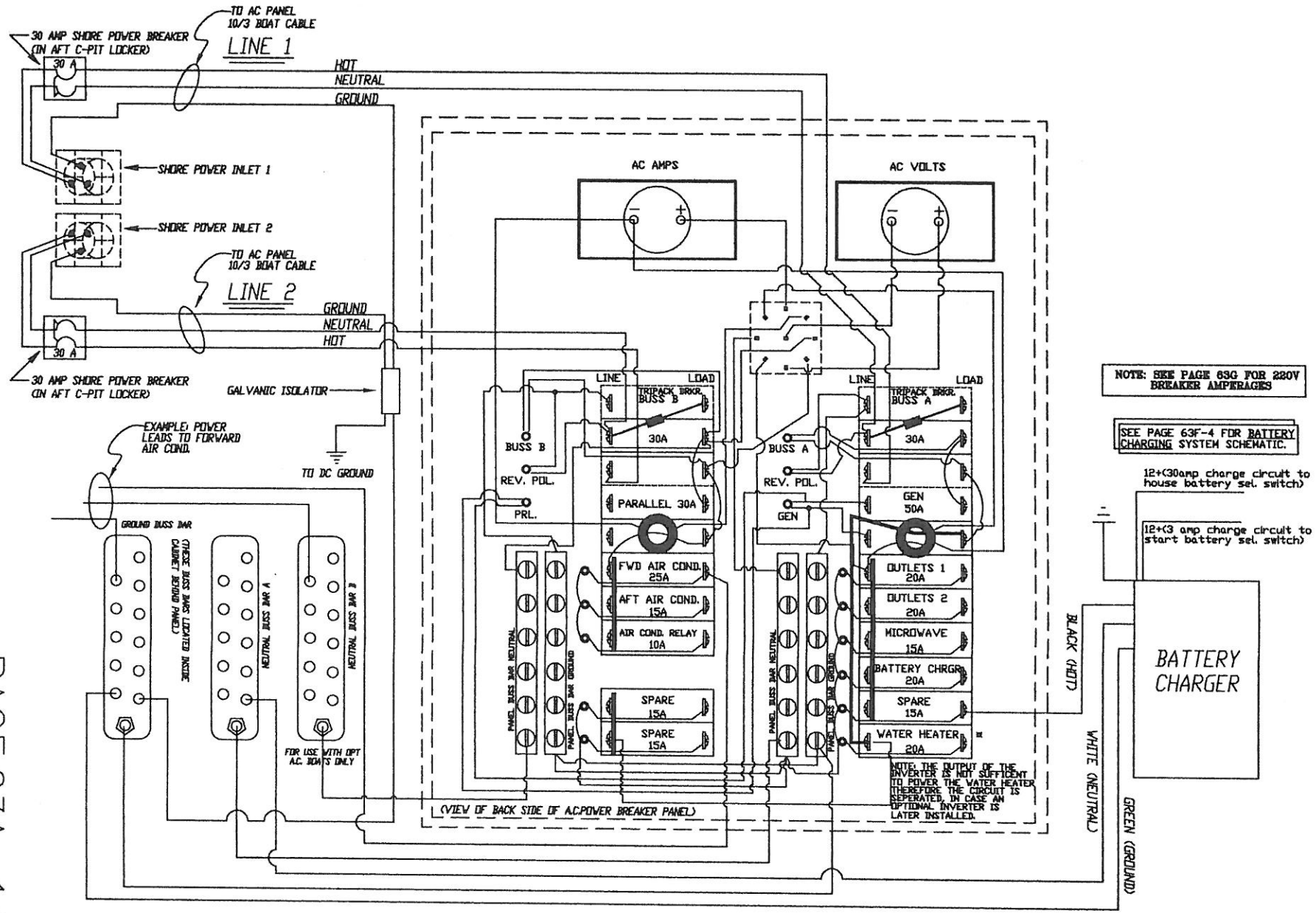


DRAWING TITLE: 380 STANDARD A.C. PANEL SCHEMATIC

DRAWING NO. 3808063A-14 | REVISION NO. NONE

DRAWN BY: ENGINEERING DEPT | DATE 7/22/97

This document discloses information for which HUNTER MARINE CORP. has proprietary rights.

HUNTER

# 380 SELECTOR SWITCH PANELS

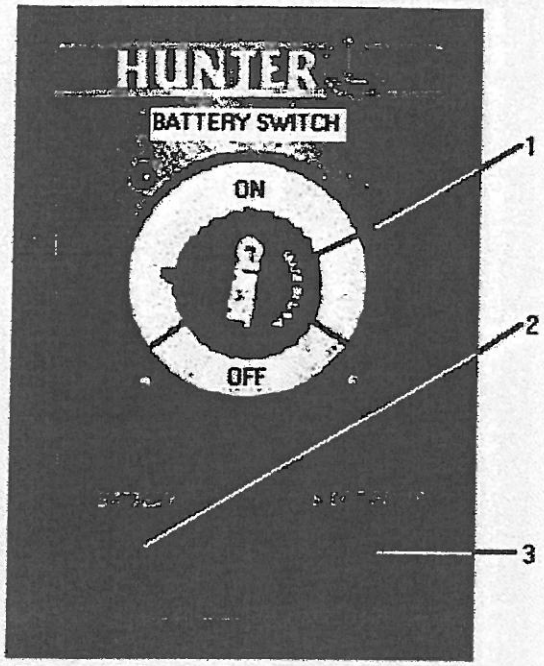


*HOUSE BATTERY ON/OFF SAFETY SWITCH PANEL (USED ON STD. BATTERY CHARGER MODEL)*

1. ON/OFF SWITCH SUPPLIES POWER FROM HOUSE BATTERIES TO MAIN D.C. PANEL
2. RESET, PUSH TO RESTORE POWER FROM HOUSE BATTERIES TO D.C. PANEL
3. BILGE PUMP RESET, PUSH TO RESTORE POWER TO BILGE PUMP

THESE PANELS USED ON (OPTIONAL) WINDLASS & ELEC. HALYARD MODELS

1. TEST (ON/OFF) BUTTON, PUSH TO TRIP RESET
2. RESET, PUSH UP TO RESET

THESE PANELS SUPPLY POWER TO THE HALYARD/WINDLASS MOTORS

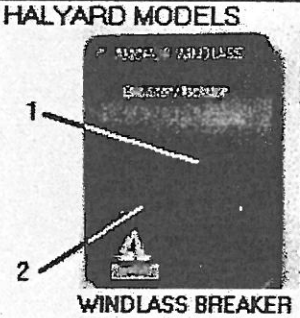


WINDLASS BREAKER

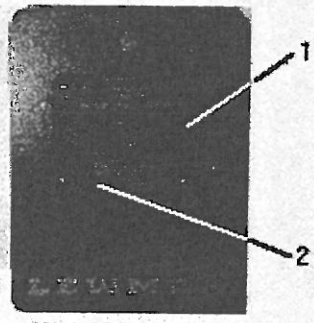


HALYARD BREAKER

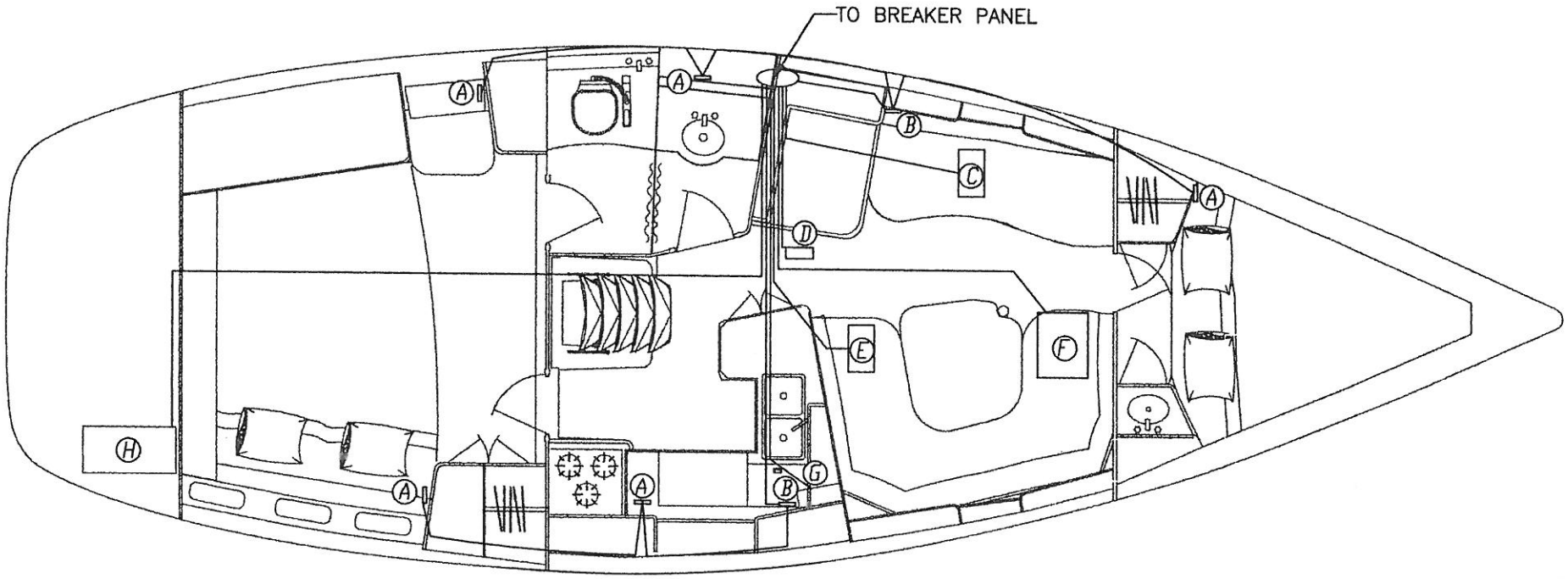


- (A) OUTLETS
- (B) G.F.I. OUTLETS
- (C) OPTIONAL INVERTER/BATTERY CHARGER
- (D) AIR CONDITIONER WATER PUMP
- (E) OPTIONAL AIR CONDITIONER
- (F) WATER HEATER
- (G) MICROWAVE OVEN OUTLET
- (H) OPTIONAL GENERATOR

| | |
|---|---|
| DRAWING TITLE: 380 AC POWER PAN WIRING | |
| DRAWING NO.: 3808063B | REVISION NO.: NONE |
| DRAWN BY: ENGINEERING DEPT. | DATE: 3/25/98 |

This document discloses information for which HUNTER MARINE CORP. has proprietary rights.

HUNTER

# 380 START BATTERY ON OFF SWITCH PANEL

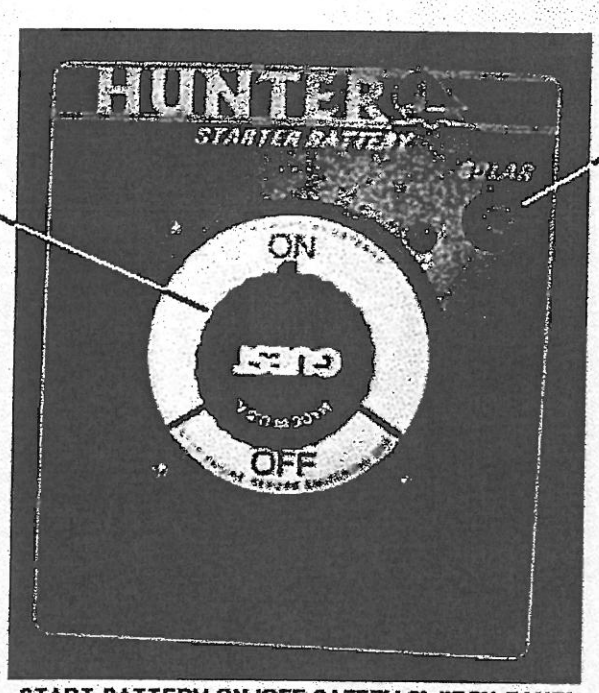


1. ON/OFF SWITCH SUPPLIES POWER FROM START BATTERY TO ENGINE & OPT. GEN STARTER/S

2. SOLAR PANEL CHARGE CIRCUIT FUSE

**START BATTERY ON/OFF SAFETY SWITCH PANEL LOCATED UNDER NAV. STATION**

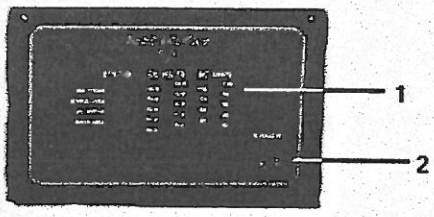


1. INVERTER STATUS DISPLAY
2. INVERTER ON/OFF SWITCH

SEE PAGE 63A-2 UNDER "INVERTER" FOR OPERATION DETAILS

NOTE: INVERTER IS OPTIONAL

**INVERTER REMOTE ON/OFF SWITCH PANEL LOCATED AT NAV. STATION**

EXAMPLE SWITCH PANEL WIRING (PARALLEL CIRCUITS)

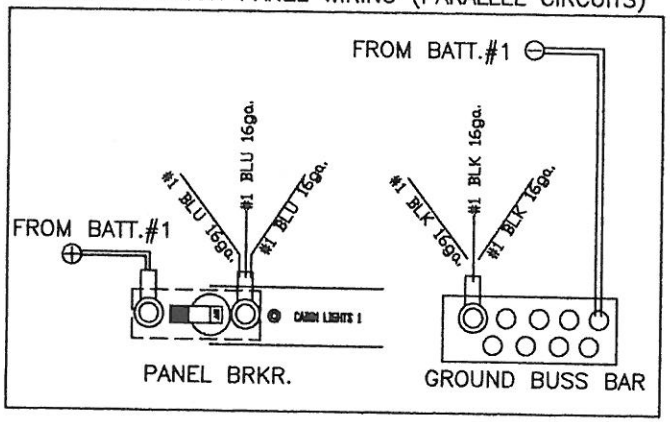


#1 & #2 = CABIN LIGHTS #1 & #2 CIRCUITS TO MAIN DISTRIBUTION PANEL

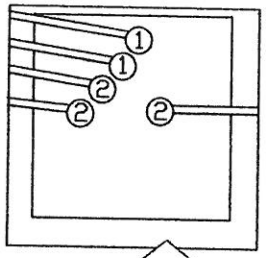


EXAMPLE LIGHT WIRING (PARALLEL CIRCUIT)

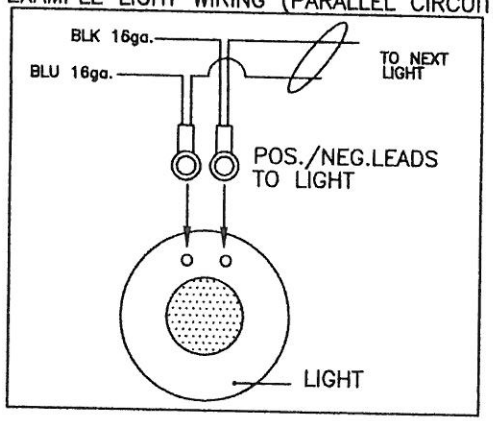


EACH CIRCUIT IN PARALLEL, 16ga. BLU (LOAD TO BREAKER) AND 16ga. BLK. GROUND TO GROUND BUSS BAR (SEE EX.)

SWIVEL LIGHTS
DOME LIGHTS
RECESSED LIGHTS
MAP LIGHT

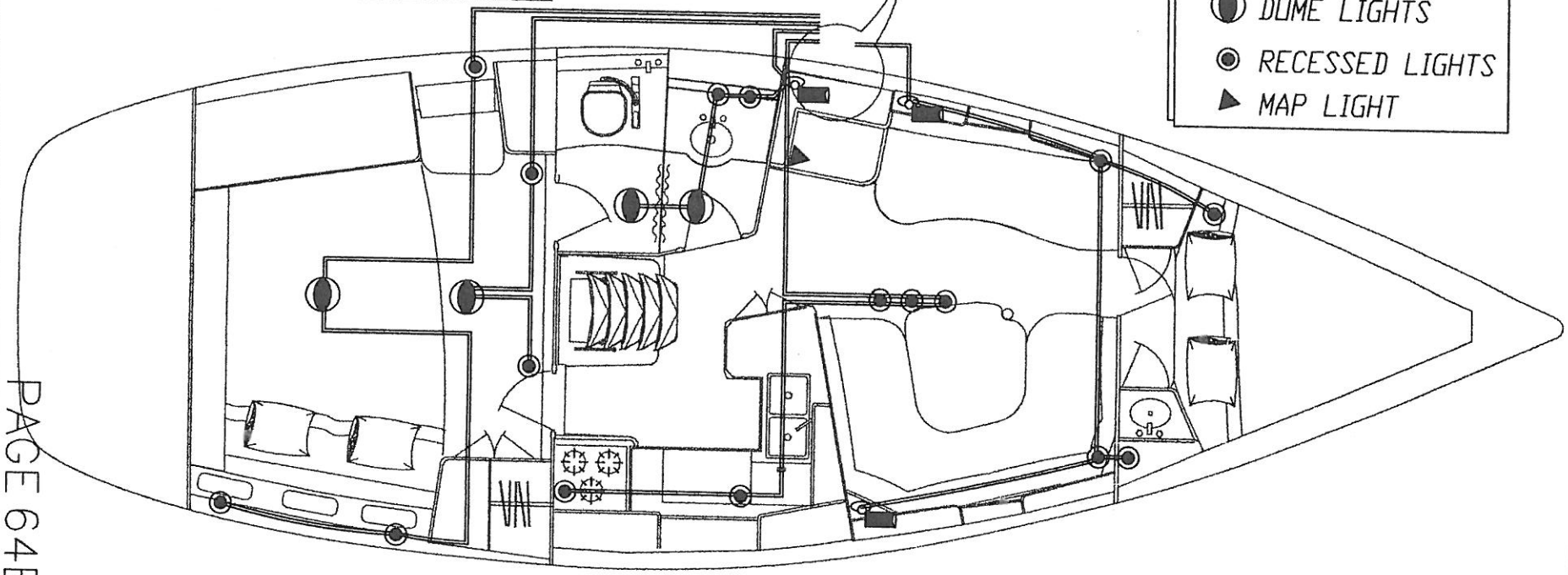

PAGE 64B-1

DRAWING TITLE: 380 12V. LIGHTS WIRING (HEADLINER)

DRAWING NO. 3808064B-1 | REVISION NO. NONE

This document discloses information for which HUNTER MARINE CORP. has proprietary rights.

HUNTER

10/3 CABLE RUNS THRU PORT SIDE OF HEADLINER TO 30 AMP. BREAKER,
RUNS FORWARD FROM BREAKER, THEN DROPS DOWN TO MAIN BREAKER PANEL
(SEE PAGE 63A-13 THRU 63A-14 FOR SHORE POWER & 30 amp. BREAKER DETAILS TO PANEL)

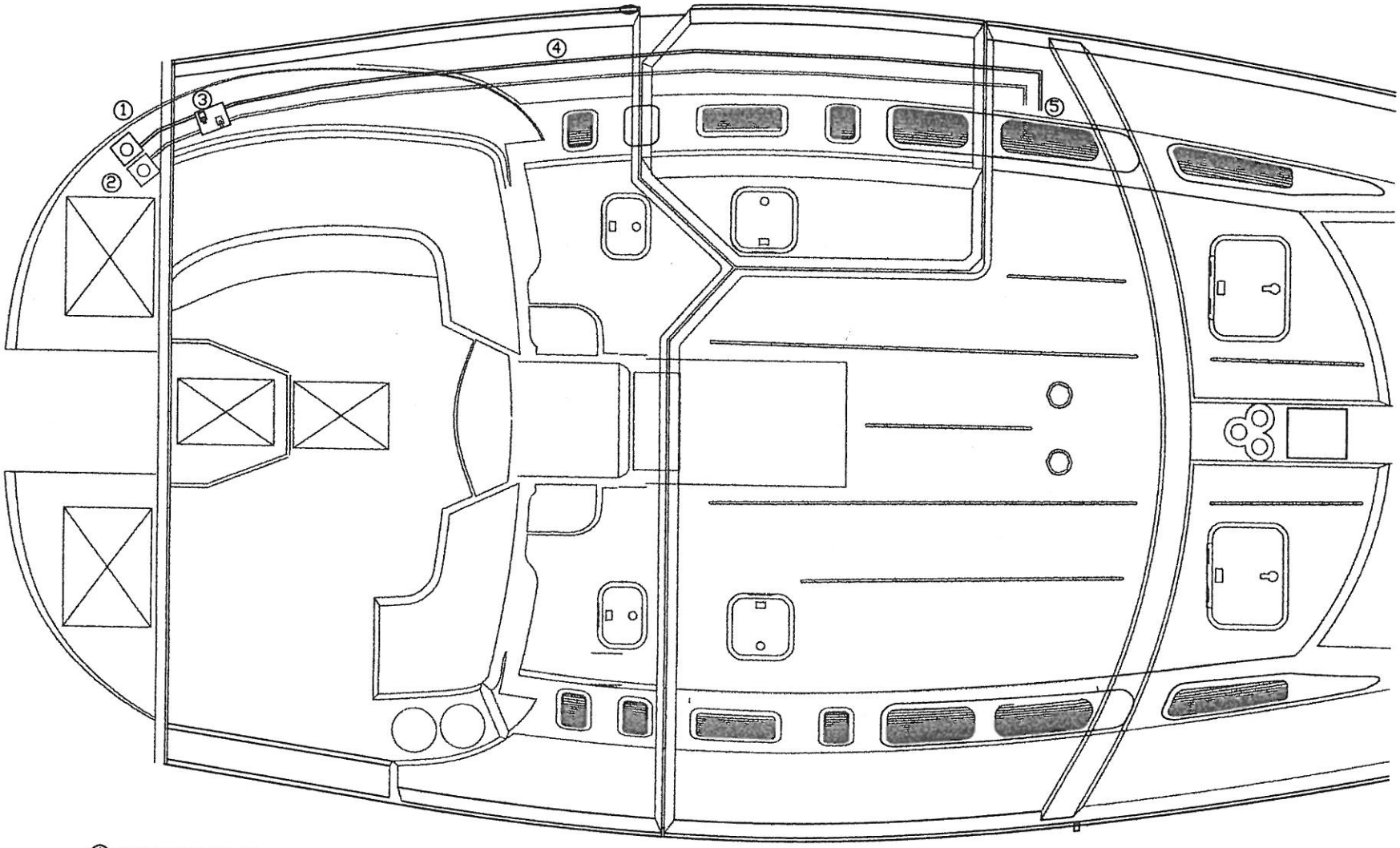


① SHORE POWER #1
② SHORE POWER (#2 OPTIONAL)
③ 30 amp. SHORE POWER BREAKER(S)
④ 10/3 BOAT CABLE
⑤ TO MAIN BREAKER PANEL

NOTE: DUAL SHORE POWER INLETS PROVIDED FOR AIR COND. EQUIPPED MODELS ONLY

| | |
|---|---|
| DRAWING TITLE: 380 AC WIRING HEADLINER | |
| DRAWING NO. 3808063C | REVISION NO. NONE |
| DRAWN BY: ENGINEERING DEPT. | DATE: 3/27/98 |

This document discloses information for which HUNTER MARINE CORP. has proprietary rights.

HUNTER

## SECTION 63D...OPTIONAL AIR COND. SYSTEMS

### BASIC OPERATING INSTRUCTIONS:

① CHOOSE POWER SOURCE (SHORE POWER OR GENERATOR) SEE PAGES 63A–2
② CHECK AIR COND. SEA STRAINER, (AFT MAIN BILGE) CLEAN IF NECESSARY
③ ENSURE THE 1/2" (12.7mm) DISCHARGE SEACOCK VALVE IS OPEN.
(SEACOCK ACCESSED THRU HOLE IN SETTEE BACK, BEHIND FWD. STBD. SETTEE CUSHION)
⑤ TURN ON A.C. MAIN (BUS "B") BREAKER ON MAIN A.C. PANEL
⑥ TURN ON UNIT AT THERMOSTAT DISPLAY PANEL AND SET TEMP.

NOTE:

IF ANY OTHER APPLIANCES ARE TO BE USED WHEN AIR CONDITIONER IS RUNNING WHEN ON SHORE POWER, BOTH "SHORE POWER A" AND "SHORE POWER B" CABLES MUST BE HOOKED UP.

IF THERE IS NO POWER AT PANEL WHEN CONNECTED TO SHORE POWER, CHECK MAIN BREAKERS INSIDE PORT AFT COCKPIT LOCKER

SEE AIR CONDITION MANUAL FOR DETAILED OPERATING PROGRAMMING/TROUBLESHOOTING INSTRUCTIONS

THIS PAGE UPDATED AS OF 1.12.98 HULL # 549



| 380 OPTIONAL AIR COND. OPER. INST | |
|---|---|
| 3808063D–1 | NONE |
| ENGINEERING DEPT. | 3/27/98 |

HUNTER

Ⓐ RAW WATER PICKUP, SEACOCK & SEA STRAINER 3/4" (19.1mm)
Ⓑ RAW WATER CIRCULATION PUMP
Ⓒ POWER WIRE TO CIRCULATION PUMP
Ⓓ THERMOSTAT CONTROL WIRE TO CONTROL BOX
Ⓔ THERMOSTAT DISPLAY PANEL
Ⓕ MAIN AC UNIT
Ⓖ POWER (10/3 BOAT CABLE) FROM BREAKER PANEL TO AC CONTROL BOX
Ⓗ MAIN SALON AFT VENT 4" (101.6mm)
Ⓘ AFT STATEROOM VENT 4" (101.6mm)
Ⓙ MAIN SALON FWD VENT 4" (101.6mm)
Ⓚ FWD STATEROOM VENT 4" (101.6mm)
Ⓛ RAW WATER DISCHARGE (SEACOCK VALVE) 1/2" (12.7mm)

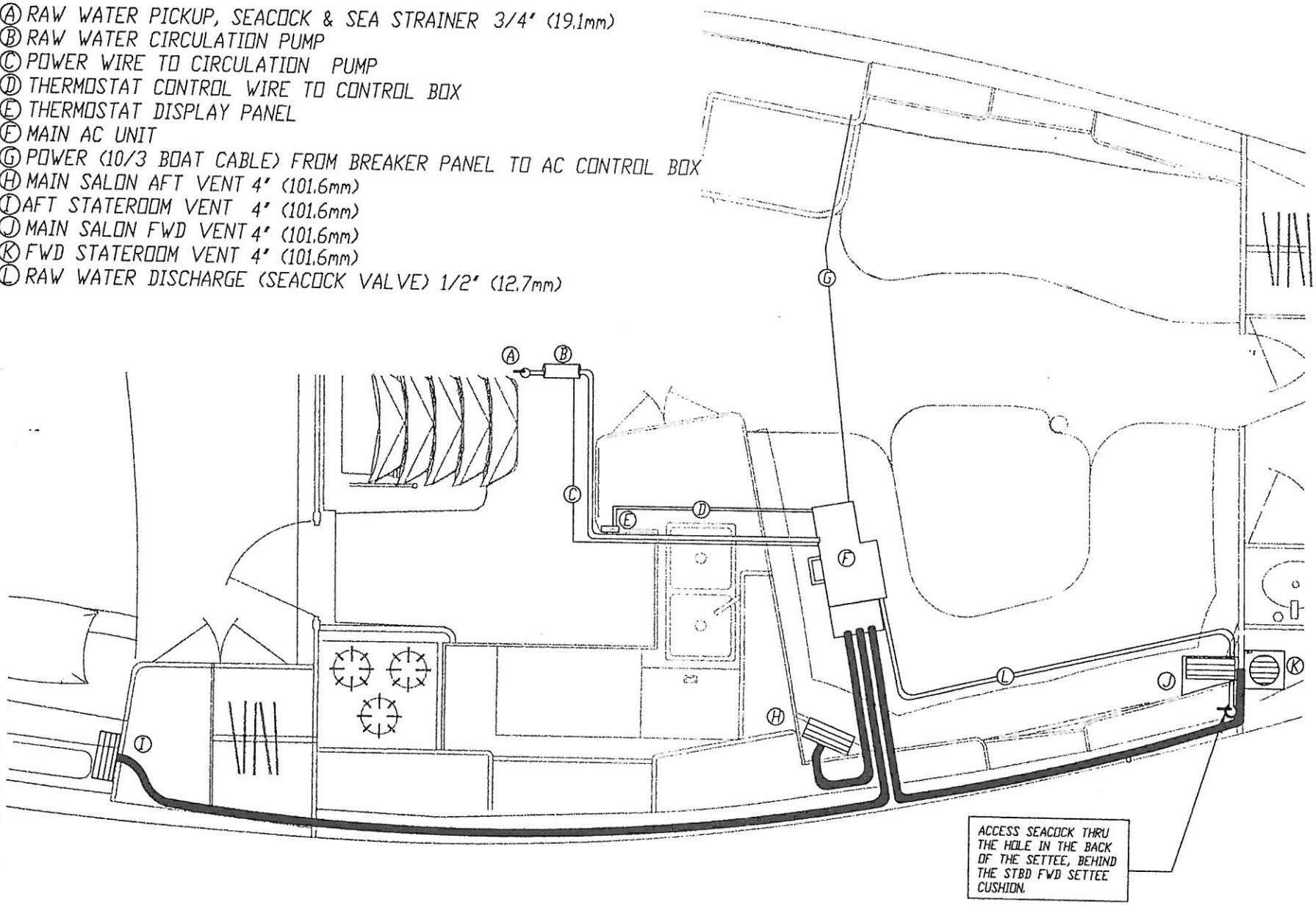


| 380 OPTIONAL A/C LAYOUT | | This document discloses information for which HUNTER MARINE CORP. has proprietary rights. |
|---|---|---|
| 38080630-2 | NONE | HUNTER |
| ENGINEERING DEPT. | 3/25/98 | |

THIS PAGE UPDATED AS OF HULL #5741

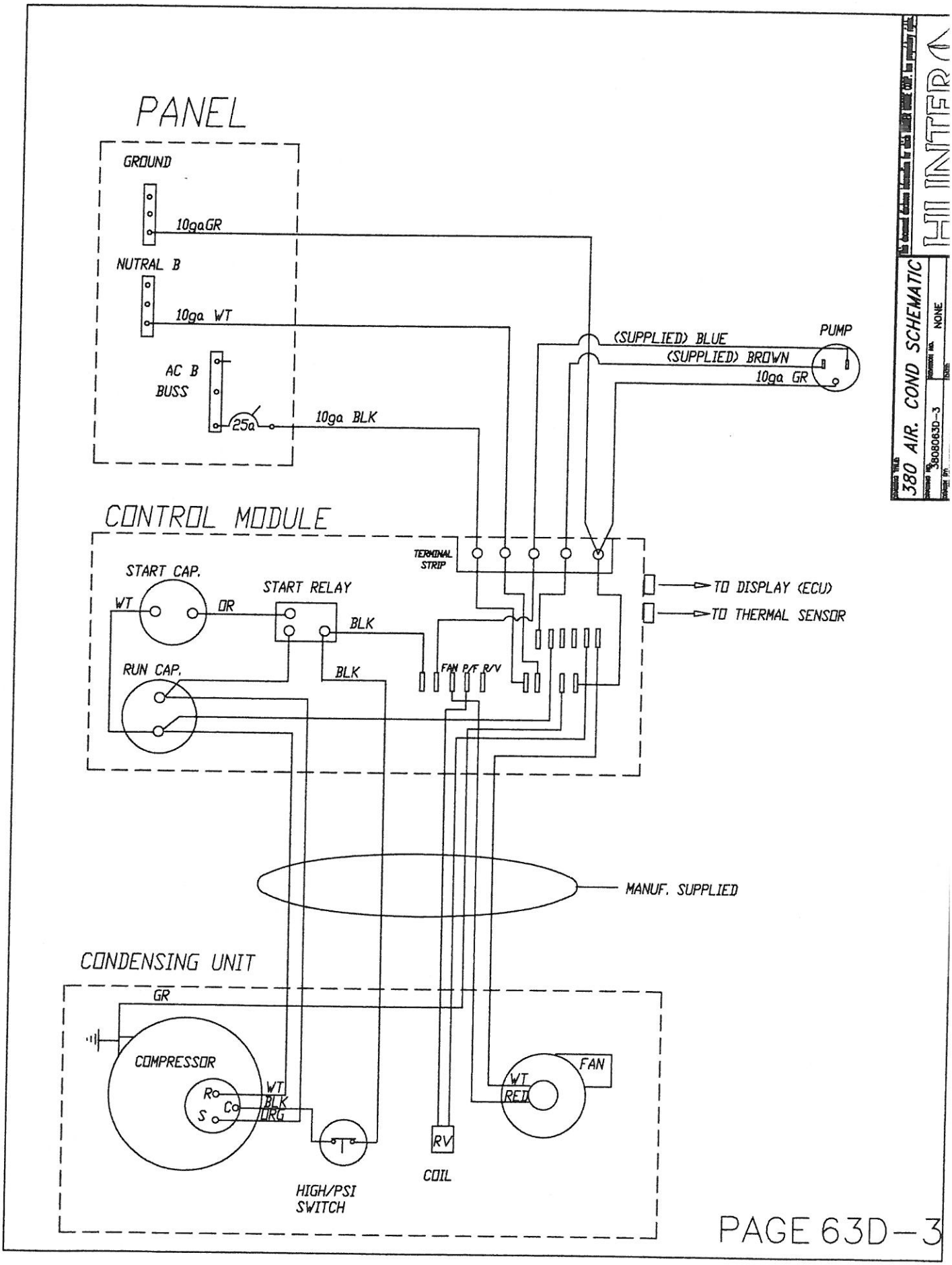
PANEL
GROUND
10gaGR
NUTRAL B
10ga WT
AC B
BUSS
25a
10ga BLK
(SUPPLIED) BLUE
(SUPPLIED) BROWN
10ga GR
PUMP
CONTROL MODULE
TERMINAL STRIP
START CAP.
WT
OR
START RELAY
BLK
RUN CAP.
BLK
FAN P/F R/V
TO DISPLAY (ECU)
TO THERMAL SENSOR
MANUF. SUPPLIED
CONDENSING UNIT
GR
COMPRESSOR
R
C
S
WT
BLK
ORG
HIGH/PSI
SWITCH
RV
COIL
FAN
WT
RED
380 A/R. COND SCHEMATIC
NONE
3808063D-3

## SECTION 63E OPTIONAL GENERATOR SYSTEM...

BASIC OPERATING INSTRUCTIONS: (NOTE: READ GENERATOR MANUAL BEFORE OPERATING GEN.)

1. FILL DIESEL FUEL TANK WITH DIESEL FUEL
2. CHECK OIL LEVEL IN GENERATOR (SEE GEN. MANUAL FOR INST.)
3. TURN ON START BATTERY SELECTOR SWITCH (AT NAV. STA.)
4. CHECK SEA STRAINER UNDER (CENTER) AFT BERTH BUNK COMP. CLEAN IF NEC.
5. OPEN RAW WATER SEACOCK UNDER AFT BERTH BUNK
6. PUSH START SWITCH ON GEN. START PANEL AT NAV. STATION TO START GEN. DO NOT RUN STARTER FOR MORE THAN 10 SECONDS AT A TIME WITH 15 SECONDS INBETWEEN, IF GEN. DOESN'T START CONSULT GENERATOR MANUAL.
7. TURN ON THE "GENERATOR" BREAKER ON "A" SIDE OF MAIN A.C. PANEL. TO POWER "B" SIDE, RAISE THE SLIDE BAR ON "B" SIDE OF MAIN A.C. PANEL AND TURN "PARALLEL" BREAKER "ON". A.C. PANEL SHOULD NOW BE OPERABLE.
8. TO SHUT GEN. DOWN PUSH STOP SWITCH UNTIL GEN STOPS.

NOTE: SEE GENERATOR MANUAL FOR PROPER MAINTENENCE, TRUOBLESHOOTING, ETC.

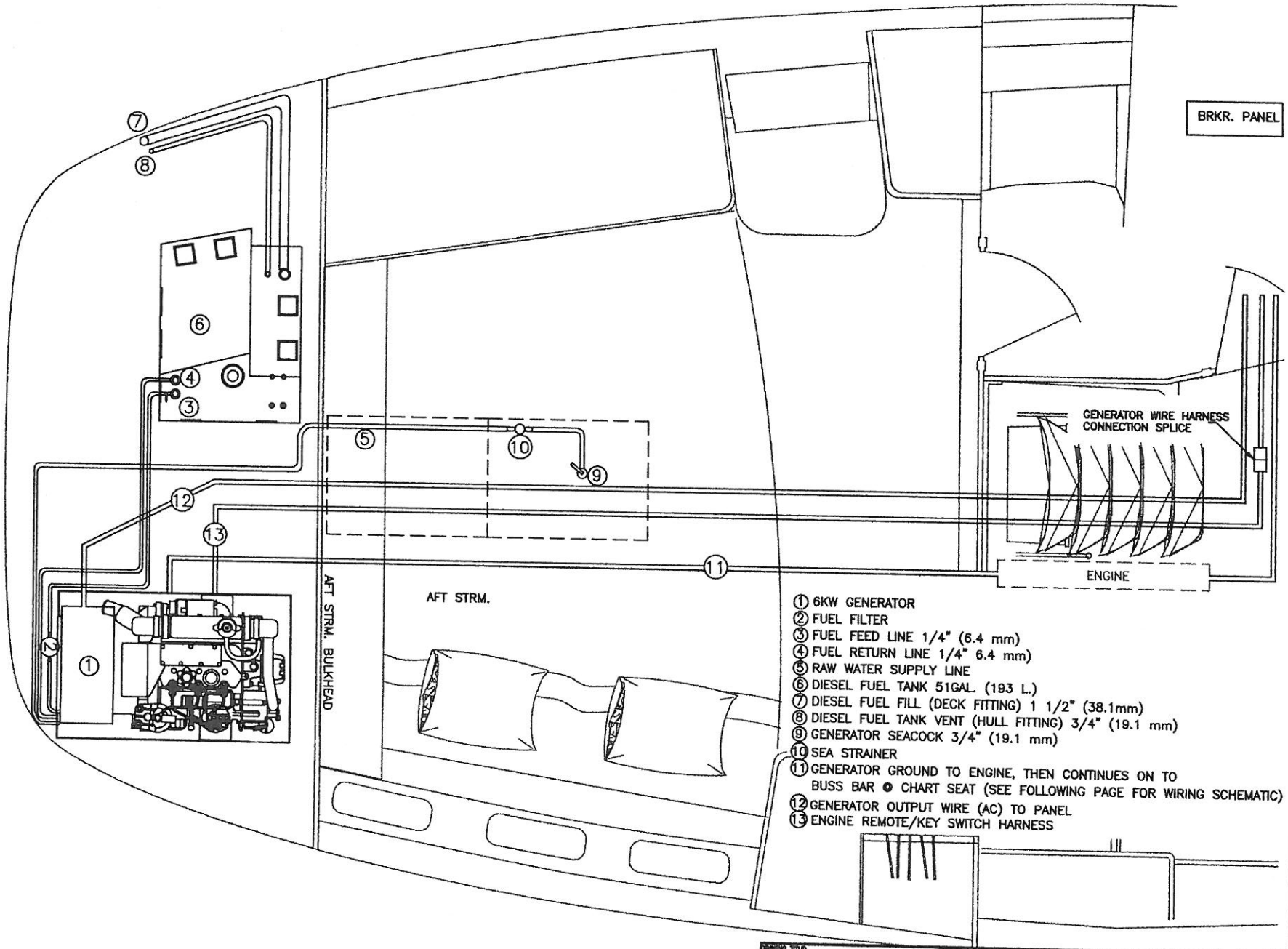
BRKR. PANEL
GENERATOR WIRE HARNESS CONNECTION SPLICE
ENGINE
AFT STRM.
AFT STRM. BULKHEAD
① 6KW GENERATOR
② FUEL FILTER
③ FUEL FEED LINE 1/4" (6.4 mm)
④ FUEL RETURN LINE 1/4" 6.4 mm)
⑤ RAW WATER SUPPLY LINE
⑥ DIESEL FUEL TANK 51GAL. (193 L.)
⑦ DIESEL FUEL FILL (DECK FITTING) 1 1/2" (38.1mm)
⑧ DIESEL FUEL TANK VENT (HULL FITTING) 3/4" (19.1 mm)
⑨ GENERATOR SEACOCK 3/4" (19.1 mm)
⑩ SEA STRAINER
⑪ GENERATOR GROUND TO ENGINE, THEN CONTINUES ON TO BUSS BAR ⊙ CHART SEAT (SEE FOLLOWING PAGE FOR WIRING SCHEMATIC)
⑫ GENERATOR OUTPUT WIRE (AC) TO PANEL
⑬ ENGINE REMOTE/KEY SWITCH HARNESS
380 (OPTIONAL) GENERATOR SYSTEM LAYOUT
3808063E-2
NONE
ENGINEERING DEPT.
4/13/98
HUNTER

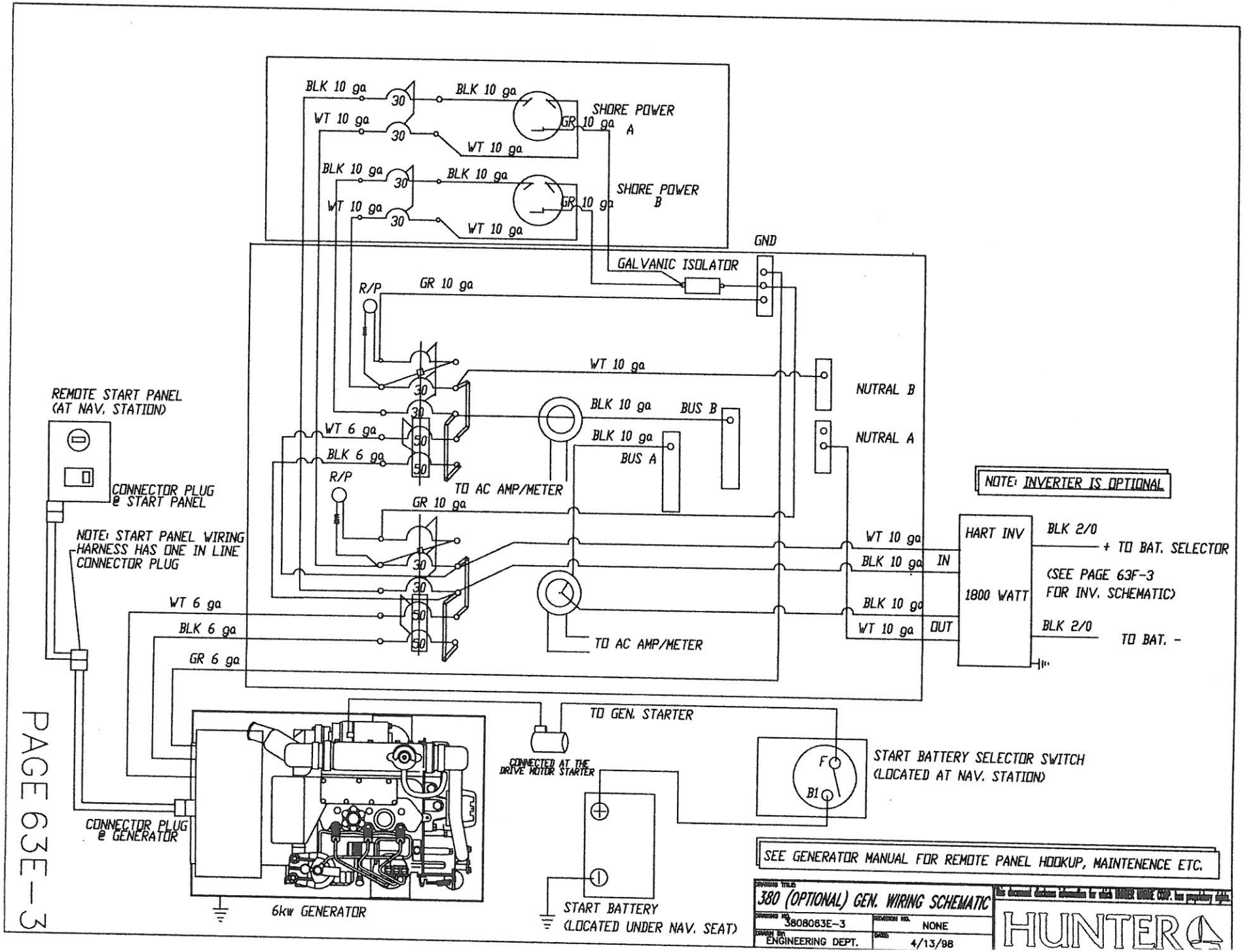
BLK 10 ga
BLK 10 ga
WT 10 ga
30
SHORE POWER A
GR 10 ga
WT 10 ga
BLK 10 ga
BLK 10 ga
WT 10 ga
SHORE POWER B
GND
GALVANIC ISOLATOR
R/P
GR 10 ga
WT 10 ga
NUTRAL B
BLK 10 ga
BUS B
WT 6 ga
BLK 6 ga
50
BLK 10 ga
BUS A
NUTRAL A
REMOTE START PANEL (AT NAV. STATION)
CONNECTOR PLUG @ START PANEL
TO AC AMP/METER
NOTE: INVERTER IS OPTIONAL
NOTE: START PANEL WIRING HARNESS HAS ONE IN LINE CONNECTOR PLUG
HART INV
1800 WATT
BLK 2/0
+ TO BAT. SELECTOR
IN
OUT
(SEE PAGE 63F-3 FOR INV. SCHEMATIC)
BLK 2/0
TO BAT. -
GR 6 ga
TO GEN. STARTER
CONNECTED AT THE DRIVE MOTOR STARTER
START BATTERY SELECTOR SWITCH (LOCATED AT NAV. STATION)
F
B1
CONNECTOR PLUG @ GENERATOR
SEE GENERATOR MANUAL FOR REMOTE PANEL HOOKUP, MAINTENENCE ETC.
6kw GENERATOR
START BATTERY (LOCATED UNDER NAV. SEAT)
380 (OPTIONAL) GEN. WIRING SCHEMATIC
3808063E-3
NONE
ENGINEERING DEPT.
4/13/98
HUNTER

## SECTION 63F...OPTIONAL INVERTER SYSTEM

### BASIC OPERATING INSTRUCTIONS: (FOR INVERTING D.C. POWER TO A.C. POWER)

① TURN "ON" HOUSE BATTERY SWITCH
② TURN ON INVERTER REMOTE PANEL AT NAV. STATION
③ TURN ON APPROPRIATE APPLIANCE BREAKER ON A.C. SIDE OF PANEL

NOTE:
READ "OPTIONAL INVERTER" ON PAGE 63A-2 FOR INVERTER SYSTEM DETAILS

SEE INVERTER MANUAL FOR TECHNICAL DATA, TROUBLESHOOTING, ETC.
OPERATING/PROGRAMMING INSTRUCTIONS



380 OPTIONAL INVERTER OPER. INST
3808063F-1
NONE
HUNTER

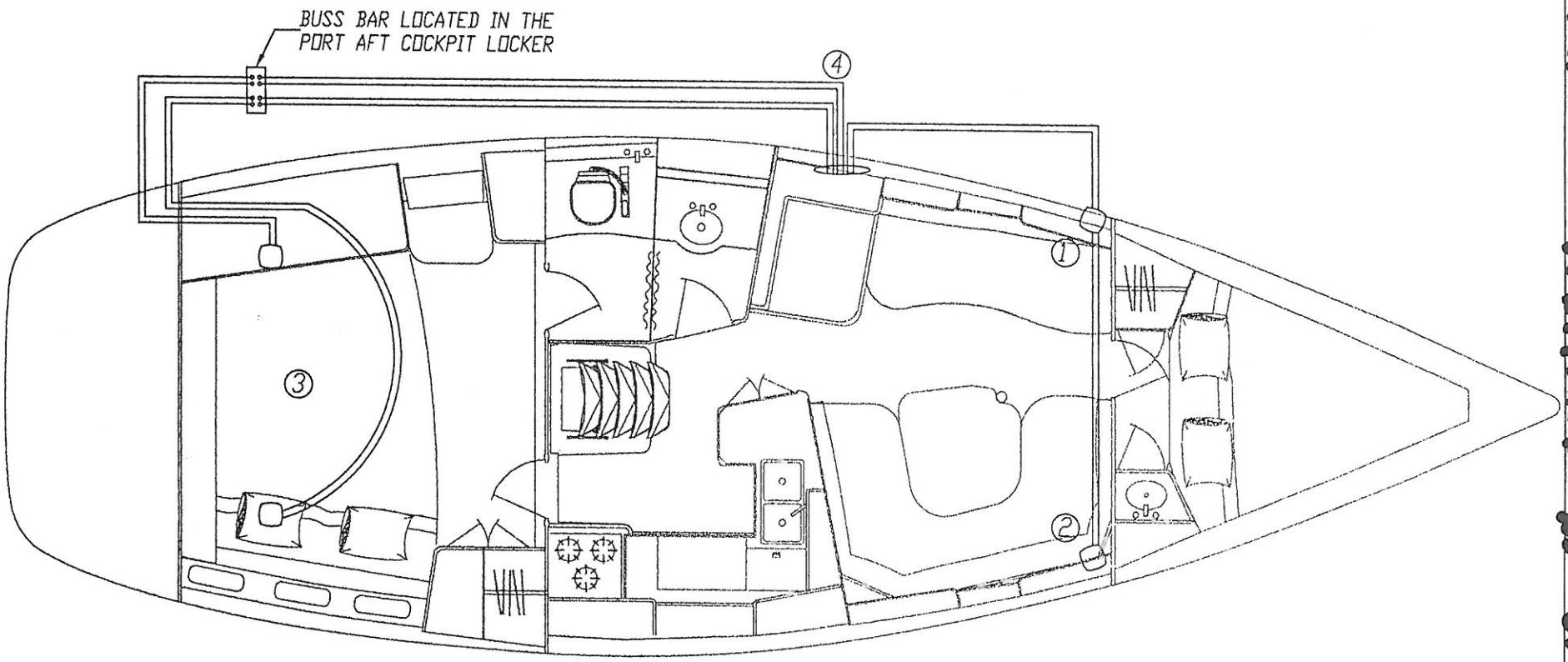


1 PORT MAIN SALON SPEAKER
2 STARBOARD MAIN SALON SPEAKER
3 ARCH SPEAKERS
** BOATS OPTIONED WITHOUT AN ARCH, SPEAKERS LOCATED ON COCKPIT PEDISTAL.
4 SPEAKER WIRES TO STEREO UNIT

| | | |
|---|---|---|
| DRAWING TITLE: 380 SPEAKER WIRING HEADLINER | | This document discloses information for which HUNTER MARINE CORP. has proprietary rights. |
| DRAWING NO. 3808064B-2 | REVISION NO. NONE | HUNTER |
| DRAWN BY ENGINEERING DEPT. | DATE: 3/28/98 | |

THIS PG UPDATED AS OF 12-1-98

THIS PG. UPDATED AS OF 12.9.98

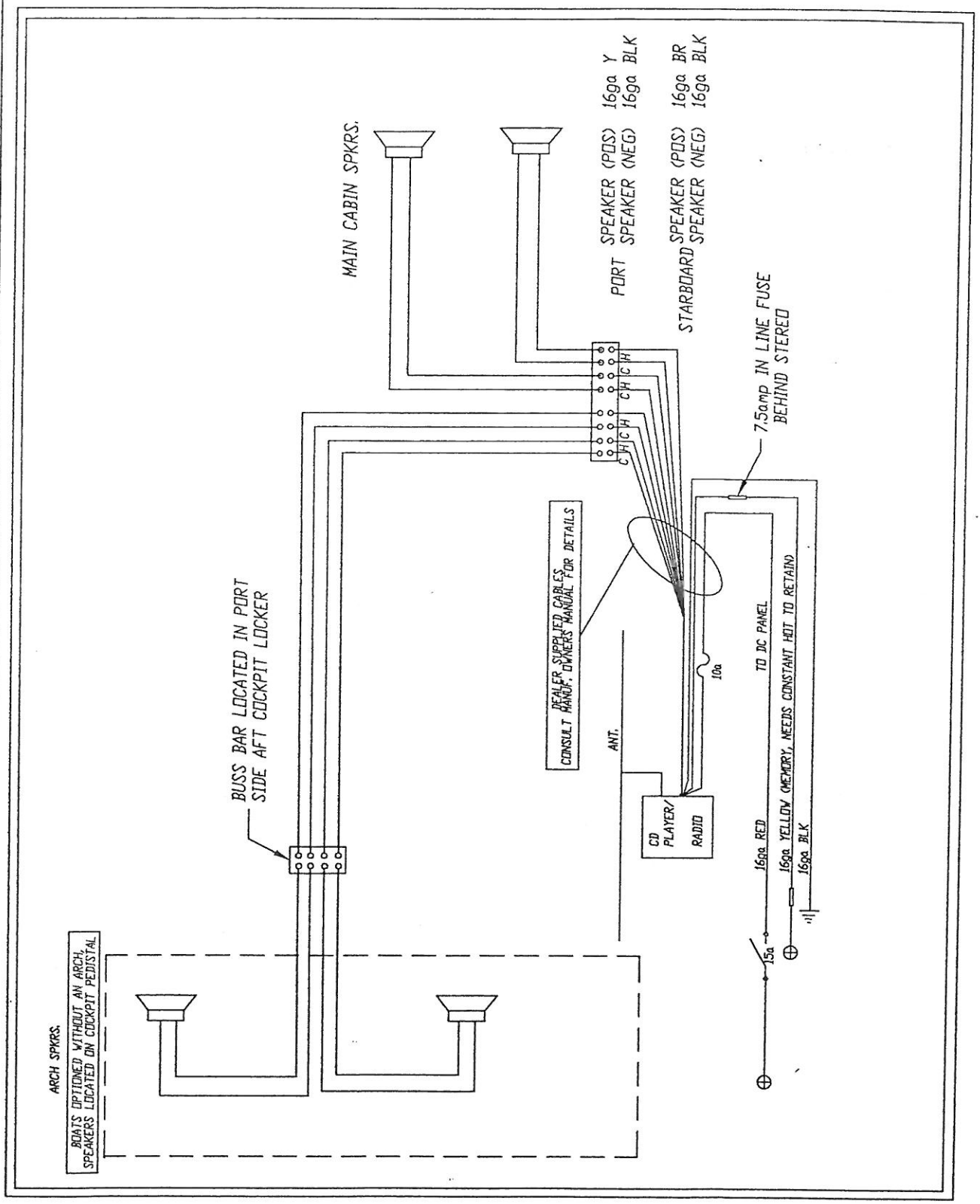


This document discloses information for which HUNTER MARINE CORP. has proprietary rights.

HUNTER

DRAWING TITLE: 380 STEREO WIRING SCHEMATIC

DRAWING NO. 3808064B-3 | REVISION NO. NONE

DRAWN BY: ENGINEERING DEPT. | DATE 4/13/98

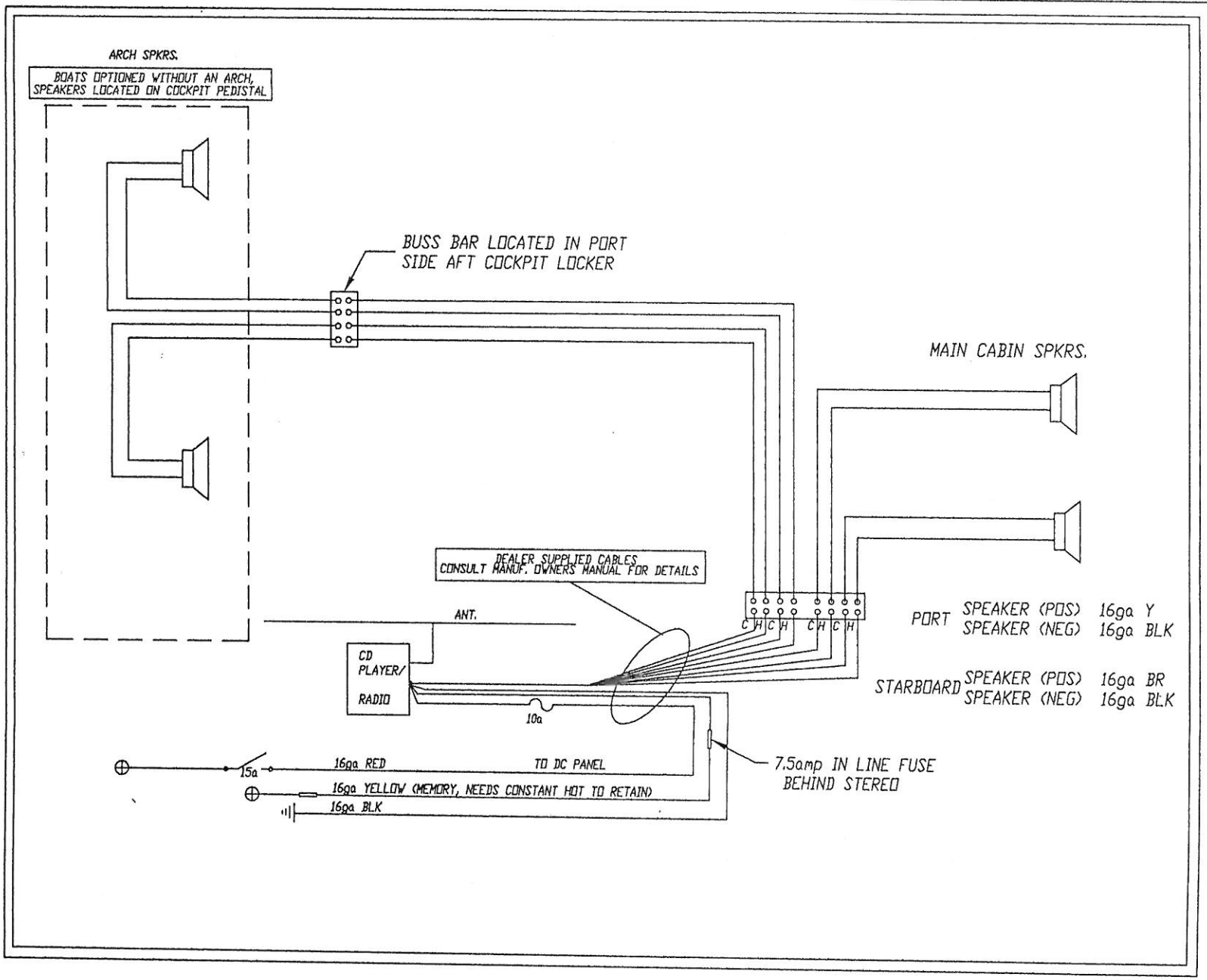


DRAWING TITLE: 380 STEREO WIRING SCHEMATIC

DRAWING NO. 38080648-3 | REVISION NO. NONE

DRAWN BY: ENGINEERING DEPT. | DATE 4/13/98

This document discloses information for which HUNTER MARINE CORP. has proprietary rights.

HUNTER

THIS PG. UPDATED AS OF 12.9.98

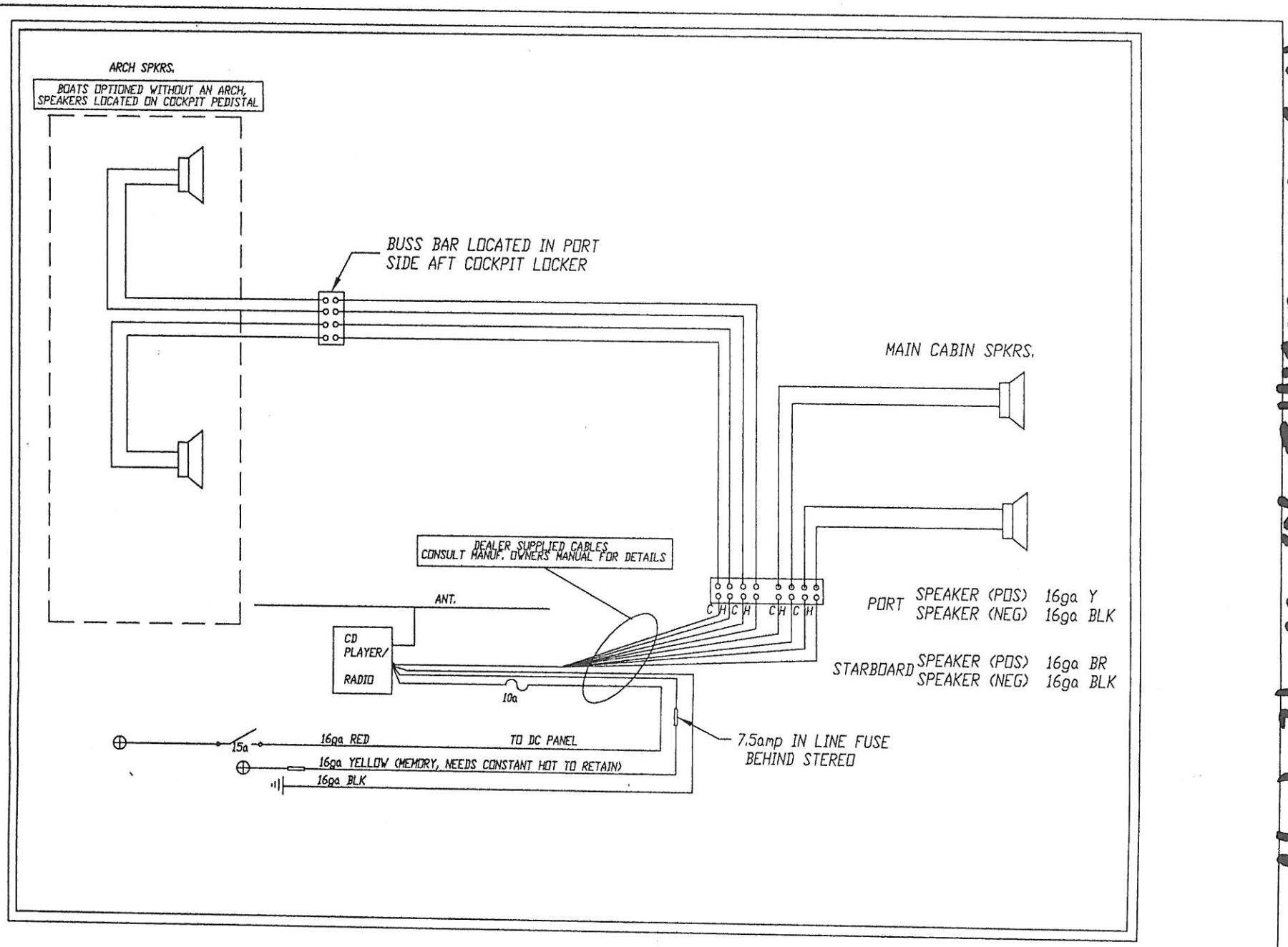


DRAWING TITLE: 380 STEREO WIRING SCHEMATIC

DRAWING NO. 38080648-3 | REVISION NO. NONE

DRAWN BY: ENGINEERING DEPT. | DATE: 4/13/98

This document discloses information for which HUNTER MARINE CORP. has proprietary rights.

HUNTER

THIS PG. UPDATED AS OF 12-9-98

# SECTION 64D...OPTIONAL WINDLASS SYSTEM

## BASIC OPERATING INSTRUCTIONS:

### LOWERING ANCHOR....

1. TURN ON START BATTERY SWITCH UNDER NAV. STATION.
2. TURN ON WINDLASS BRKR. ON MAIN D.C. BRKR. PANEL.
3. PUSH WINDLASS 'DOWN' BUTTON INSIDE ANCHOR WELL LOCKER.

NOTE: 'BUMP' SWITCH UNTIL ANCHOR CLEARS ANCHOR ROLLER AND HULL BEFORE LETTING ANCHOR DOWN FREELY.

### RAISING ANCHOR....

1. START BOAT ENGINE, THIS WILL ALLOW CONTROL OF BOAT WHEN ANCHOR BECOMES FREE, AS WELL AS REDUCING LOAD ON BATTERY
2. SAME AS STEP #1 OF LOWERING ANCHOR
3. SAME AS STEP #2 OF LOWERING ANCHOR
4. PUSH WINDLASS 'UP' BUTTON (LOCATED-NEXT TO 'DOWN BUTTON' BEING CAREFUL AS THE ANCHOR APPROACHES THE HULL AND ANCHOR ROLLER) UNTIL THE ANCHOR RESTS IN THE STEMHEAD PROPERLY.

NOTE: IF IT APPEARS THERE IS NO POWER TO THE WINDLASS, CHECK RESET BRKR. AT THE NAV. STATION.
IF WINDLASS BECOMES INOPERABLE ELECTRICALLY, A MANUAL WINCH HANDLE IS SUPPLIED, SEE THE 'WINDLASS MANUAL' SUPPLIED IN YOUR OWNERS MANUAL PACKAGE FOR INSTRUCTIONS.



380 OPTIONAL WINDLASS OPERATING INST.
DRAWING NO. 3808064D-1
REVISION NO. NONE
This document discloses information for which HUNTER MARINE CORP. has proprietary rights.
HUNTER

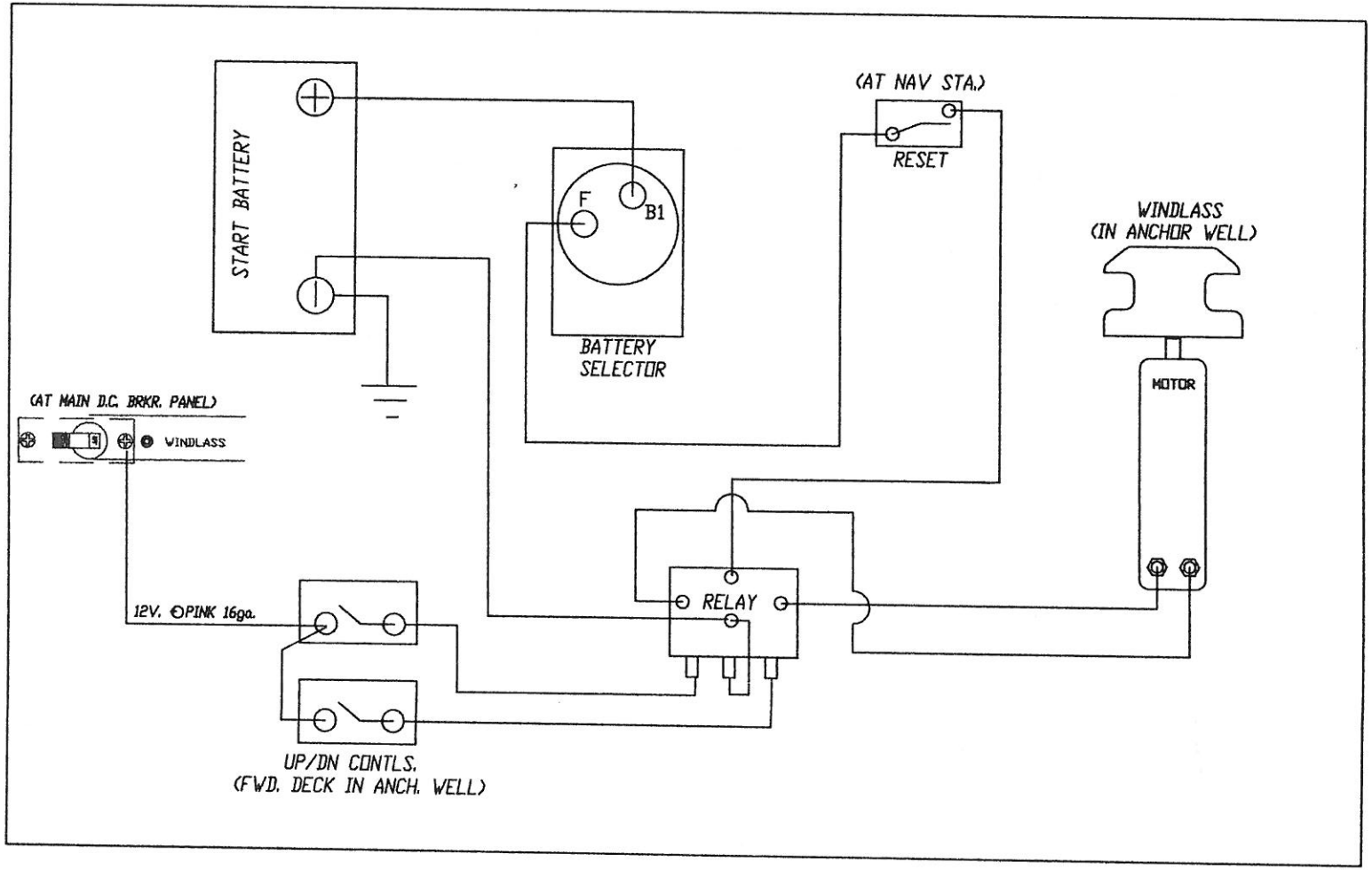


NOTE: SEE PAGE 64C FOR WIRE RUN LOCATIONS

| | |
|---|---|
| DRAWING TITLE: 380 OPTIONAL WINDLASS WIRING | This document discloses information for which HUNTER MARINE CORP. has proprietary rights. |
| DRAWING NO. 3808064D-2 | DRAWING REV. NONE |
| DRAWN BY ENGINEERING DEPT. | HUNTER |

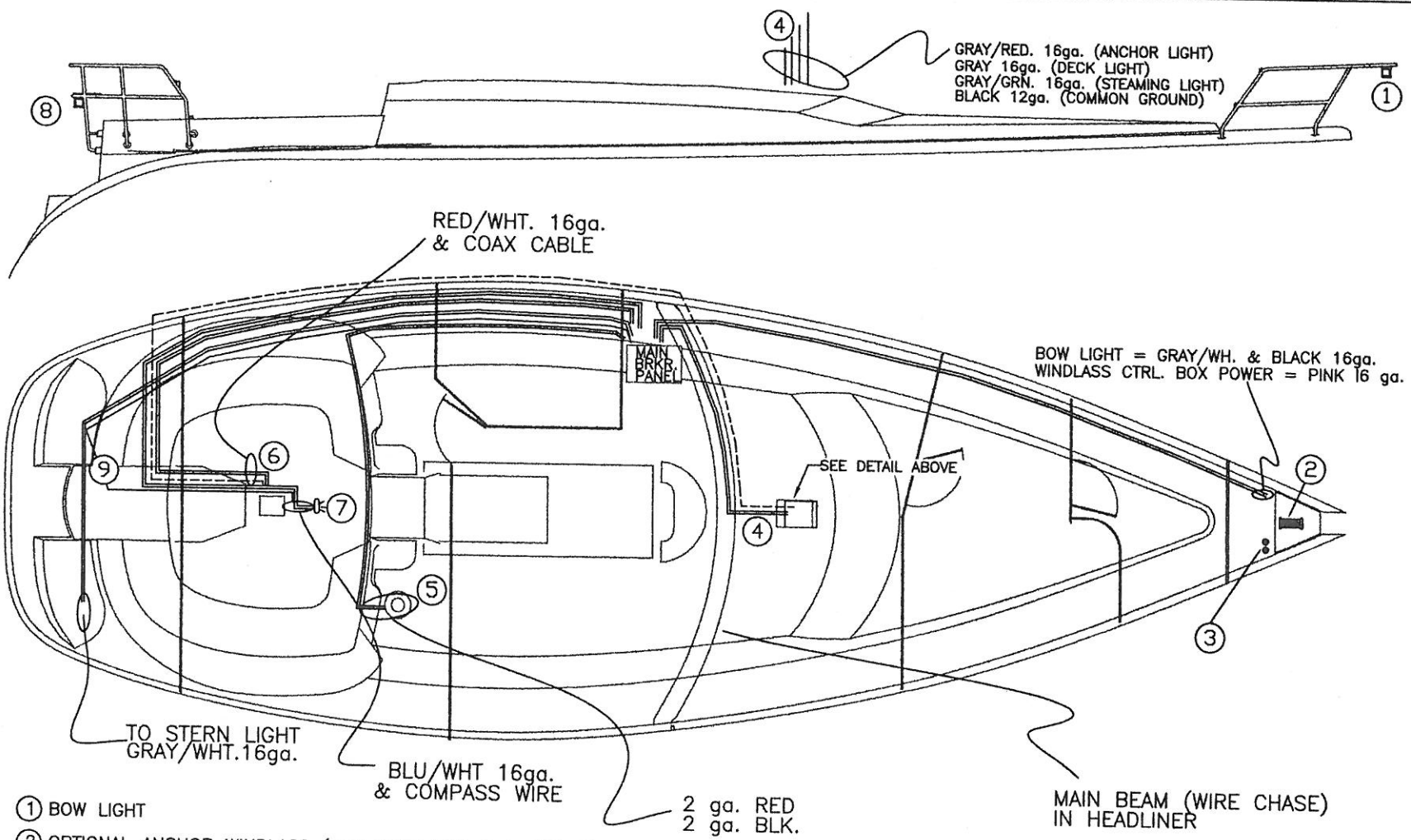


1. BOW LIGHT
2. OPTIONAL ANCHOR WINDLASS (SEE PAGE 64D-1 & 64D-2)
3. WINDLASS CONTROLS
4. POWER LEADS TO ANCHOR, DECK, STEAMING LIGHTS
5. OPTIONAL ELEC. HALYARD (SEE PAGE 64E-1 & 2)
6. VHF RADIO (IN COCKPIT CONSOLE)
7. COURTESY LIGHT (IN COCKPIT CONSOLE BASE)
8. STERNLIGHT
9. COMPASS WIRE RUN

---------- = VHF COAX CABLE (CONNECTOR ABOVE MAST POST)

NOTE: SOME WIRE RUNS SHOWN IN APPROXIMATE LOCATIONS FOR CLARITY, SEE PAGE 64F FOR WIRE CHASE LOCATIONS

DRAWING TITLE: 376 12V. WIRING DECK

This document discloses information for which WEBER MARINE CORP. has proprietary rights.

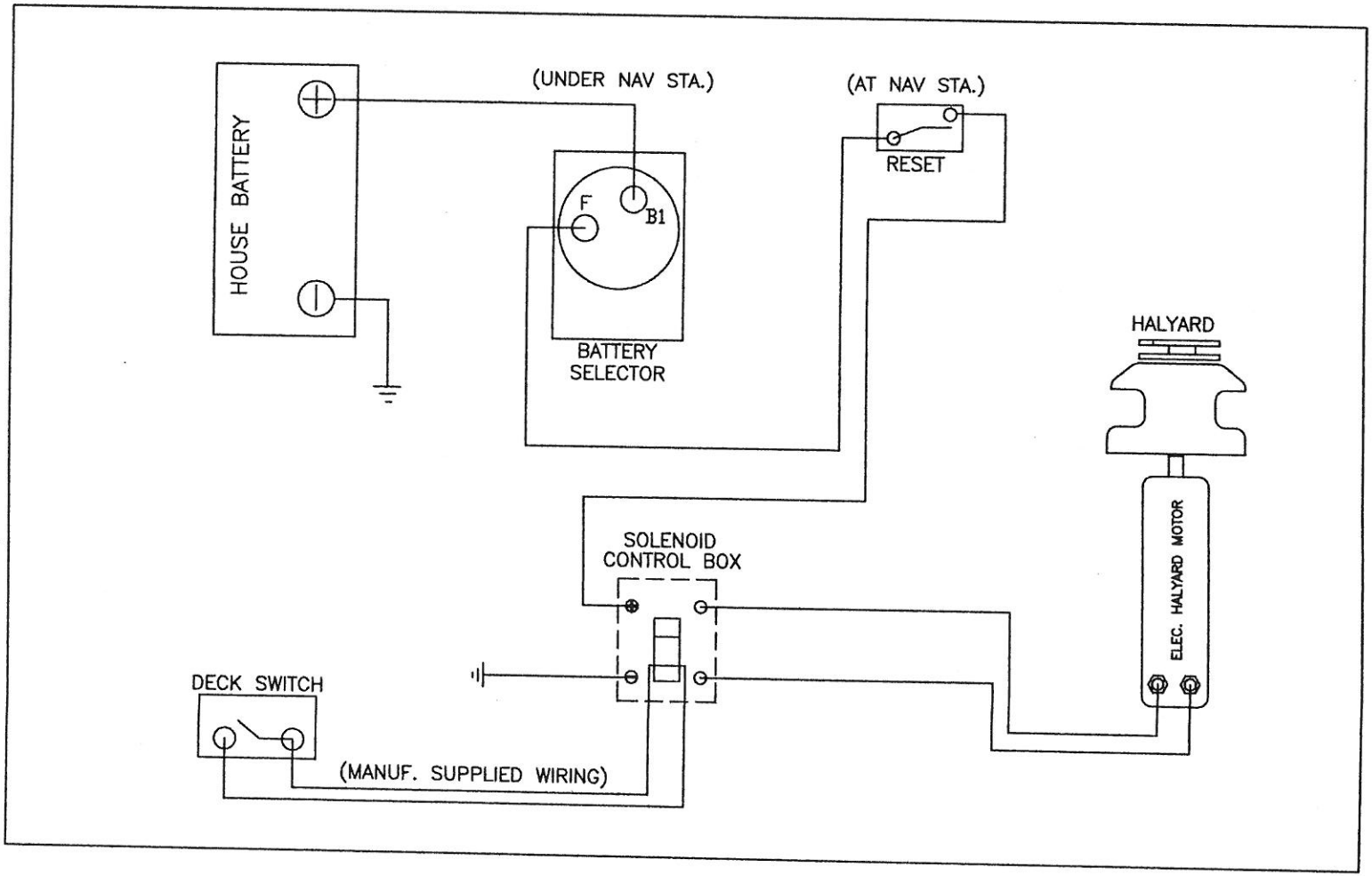


NOTE: SEE PAGE 64C FOR WIRE RUN LOCATIONS

DRAWING TITLE: 3 (OPTIONAL) ELEC. HALYARD SCHEMATIC

DRAWING NO. 3608064E-2 | REVISION NO. NONE

DRAWN BY: ENGINEERING DEPT. | DATE: 4/14/98

This document discloses information for which HUNTER MARINE CORP. has proprietary rights.

HUNTER

## SECTION 64E...OPTIONAL ELEC. HALYARD SYSTEM

# BASIC OPERATING INSTRUCTIONS:

1. TURN ON "HOUSE BATTERY" SWITCH AT NAV. STATION.
2. HALYARD SWITCH ON DECK SHOULD NOW OPERATE WINCH



DRAWING TITLE: 3 OPT. ELEC. HALYARD OPERATING INST.
DRAWING NO. 3808064E-1
REVISION NO. NONE
DRAWN BY
This document delivers information for which HUNTER YACHT CORP. has proprietary rights.
HUNTER

TWO 2" (101.6 mm) FLEX. CONDUIT CHASE TUBES RUN

1 1/2" (38.1 mm) P.V.C. CHASE TUBE RUNS FROM PT. AFT COCKPIT LOCKER FORWARD TO MAIN BREAKER PANEL CABINET

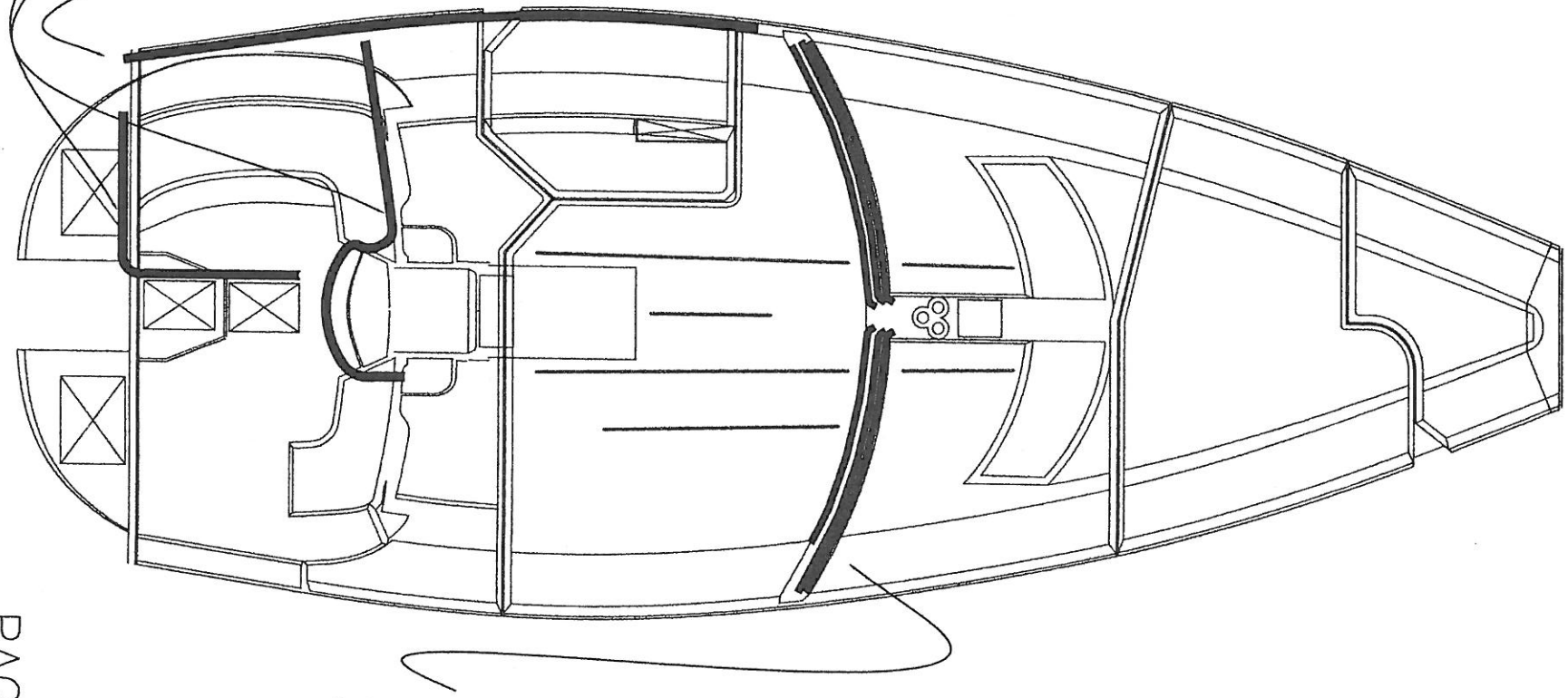

THREE 1" (50.8 mm) FLEX. CONDUIT CHASE TUBES RUN FROM PORT & STBD MAIN BEAM IN HEADLINER TO ACCESS PANEL ABOVE COMPRESSION POST IN MAIN SALON
MESSENGER LINES ARE INSTALLED, AND CAN BE ACCESSED THRU CHAINPLATE AND MAST COMPRESSION POST ACCESS COVERS

| | |
|---|---|
| DRAWING TITLE: WIRE CHASE LOCATIONS (HEADLINER) | This document discloses information for which HUNTER MARINE CORP. has proprietary rights. |
| DRAWING NO. 3808064F | REVISION NO. NONE |
| DRAWN BY: ENGINEERING DEPT. | DATE: 4/14/98 |

HUNTER

EXAMPLE SWITCH PANEL WIRING (PARALLEL CIRCUITS)

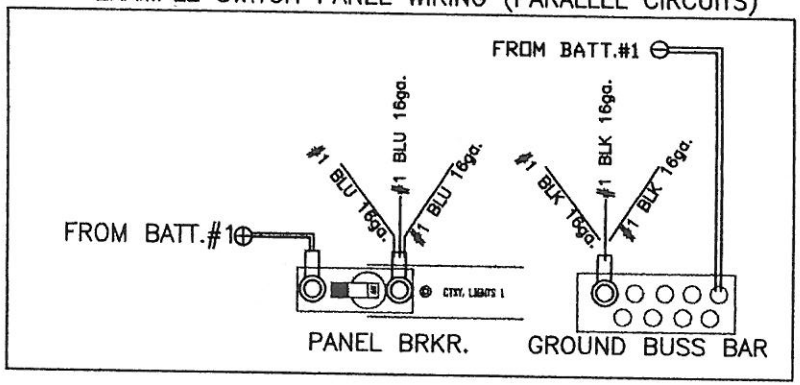


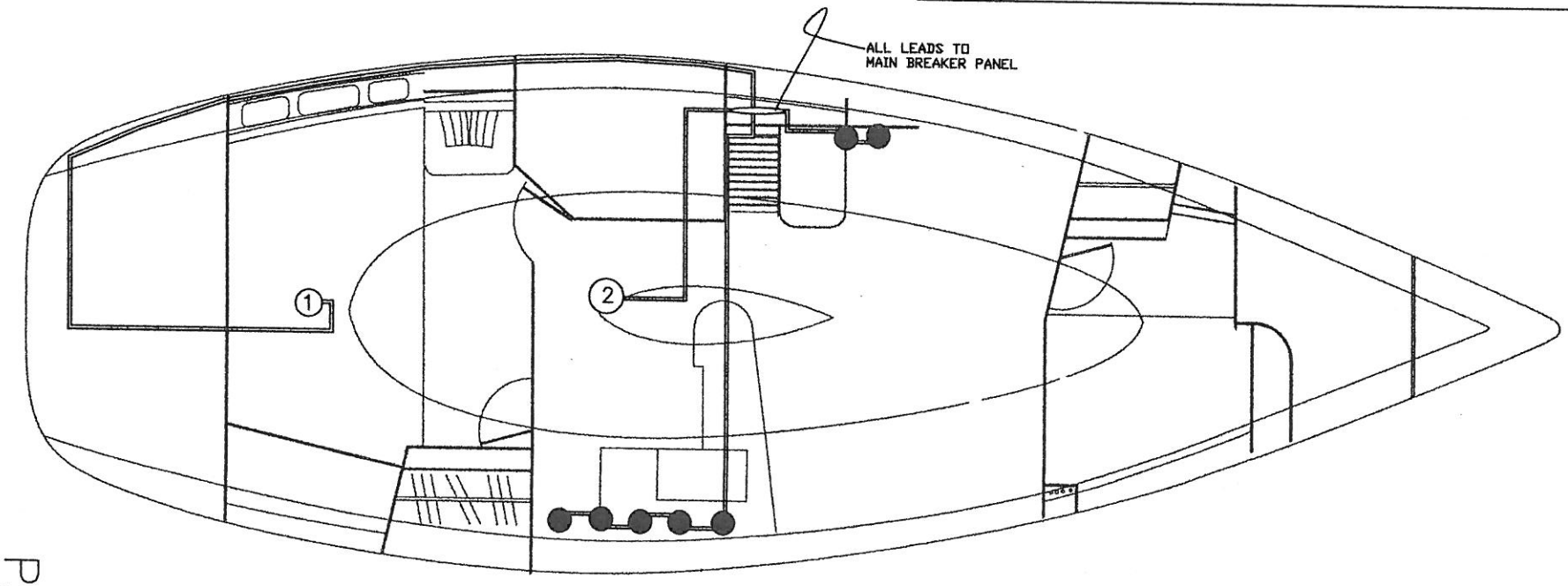


① COCKPIT COURTESY LIGHT
② ENGINE BOX COURTESY LIGHT
} COURTESY #1 BREAKER

● MAIN SALON COURTESY LIGHT — COURTESY #2 BREAKER

PAGE 64G

| | |
|---|---|
| DRAWING TITLE: 380 CTSY. LITE WIRING | This document discloses information for which HUNTER MARINE CORP. has proprietary rights. |
| DRAWING NO. 3808064G | REVISION NO. NONE |
| DRAWN BY: ENGINEERING DEPT | DATE: 4/14/98 |

HUNTER

## SECTION 64H...REFRIGERATION SYSTEM

### BASIC OPERATING INSTRUCTIONS:

1. CHECK SEA STRAINER & OPEN RAW WATER SEACOCK IN PORT AFT MAIN BILGE LOCKER
2. ENSURE THE 1/2" (12.7mm) DISCHARGE SEACOCK VALVE IS OPEN.
   (SEACOCK ACCESSED THRU HOLE IN SETTEE BACK, BEHIND FWD. STBD. SETTEE CUSHION.)
3. ON STANDARD BATTERY CHARGER MODEL, TURN ON HOUSE BATTERY SEL. SWITCH (UNDER CHART TABLE)
4. TURN ON MAIN D.C. BREAKER AT MAIN BREAKER PANEL
5. TURN ON REFRIG. BREAKER
6. SET THERMOSTATS TO DESIRED TEMP.

NOTE: KEEP SEA STRAINER CLEAN TO PREVENT IMPROPER CIRCULATION
IF LEAVING UNIT ON WHEN AWAY FROM BOAT
BE SURE SHORE POWER CABLES ARE CONNECTED AND
BATTERY CHARGER IS ON TO PREVENT BATTERY DRAIN.
(OPTIONAL INVERTER EQUIPPED MODELS CHARGE CIRCUIT
IS AUTOMATIC IF SHORE POWER IS CONNECTED AND HAS
POWER TO MAIN DISTRIBUTION PANEL.)

THIS PAGE UPDATED AS OF HULL #549 1.12.99



| 380 REFRIG. OPER. INSTRUCTIONS | |
|---|---|
| 3808064H-1 | NONE |
| ENGINEERING DEPT. | 4/14/98 |

HUNTER

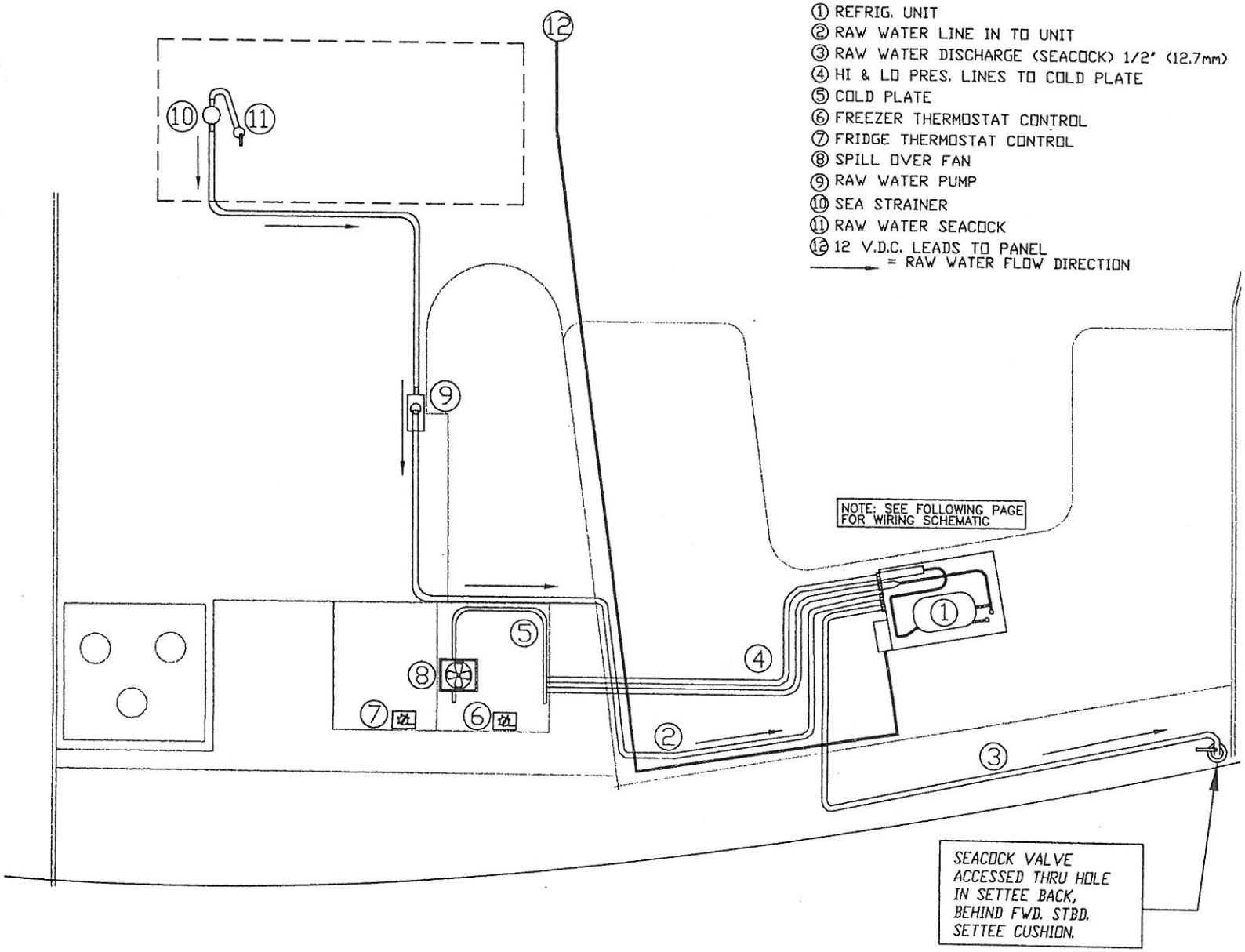


| | |
|---|---|
| 380 (OPTIONAL) REFRIGERATION SYSTEM LAYOUT | |
| 3808064H-2 | NONE |
| ENGINEERING DEPT. | 4/14/98 |

HUNTER

THIS PAGE UPDATED AS OF HULL #544 1-12-99

PAGE 64H-2

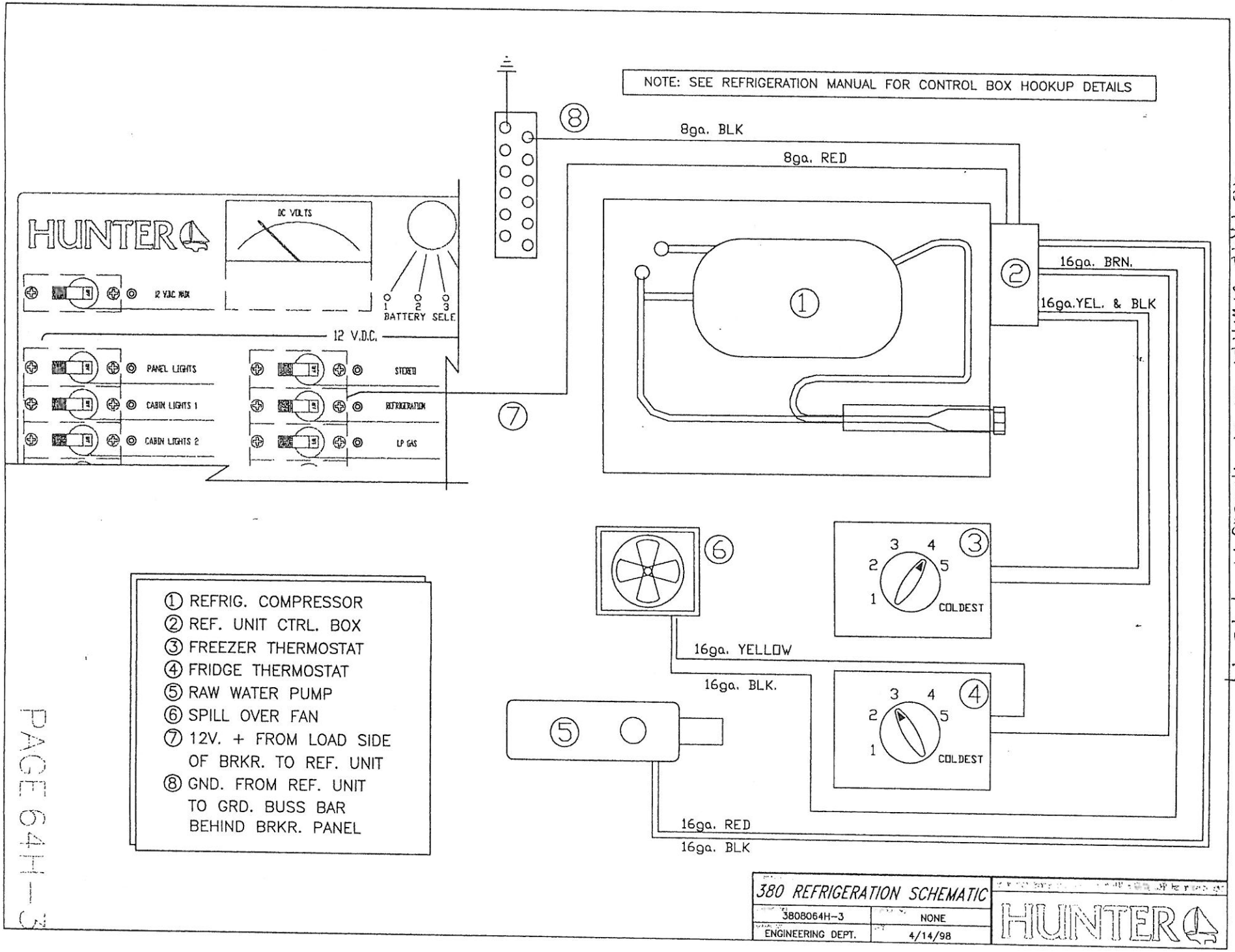


THIS PAGE UPDATED AS OF HULL#344 1.12.99

PAGE 64H-3

= PVC CHASE PIPE

= CROSSOVER/EXIT DETAILS

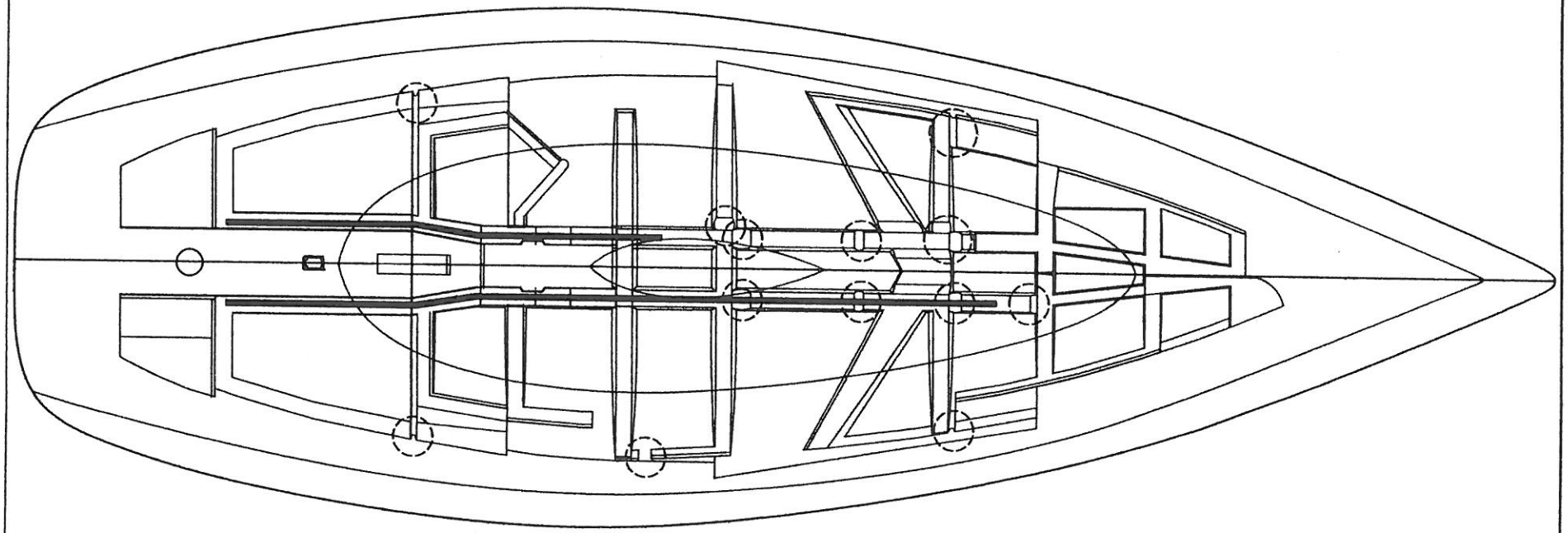

DRAWING TITLE
380 WIRE CHASE LOCATIONS (PAN)

DRAWING NO. REVISION NO.

This document discloses information for which MOHER MOORE CORP. has proprietary rights.

THIS PAGE IS PROVIDED FOR ANY ADDITIONAL DC ELECTRICAL INFORMATION.

1. ALL DC WIRING WITHIN 12" OF ANY COMPASS SHALL BE TWISTED PAIRS... THAT IS THE HOT LINE AND GROUND SHALL BE TWISTED TOGETHER.

HUNTER

380 DC CONSUMER NOTES

3808084J | NONE

ENGINEERING DEPT. | 3/12/98

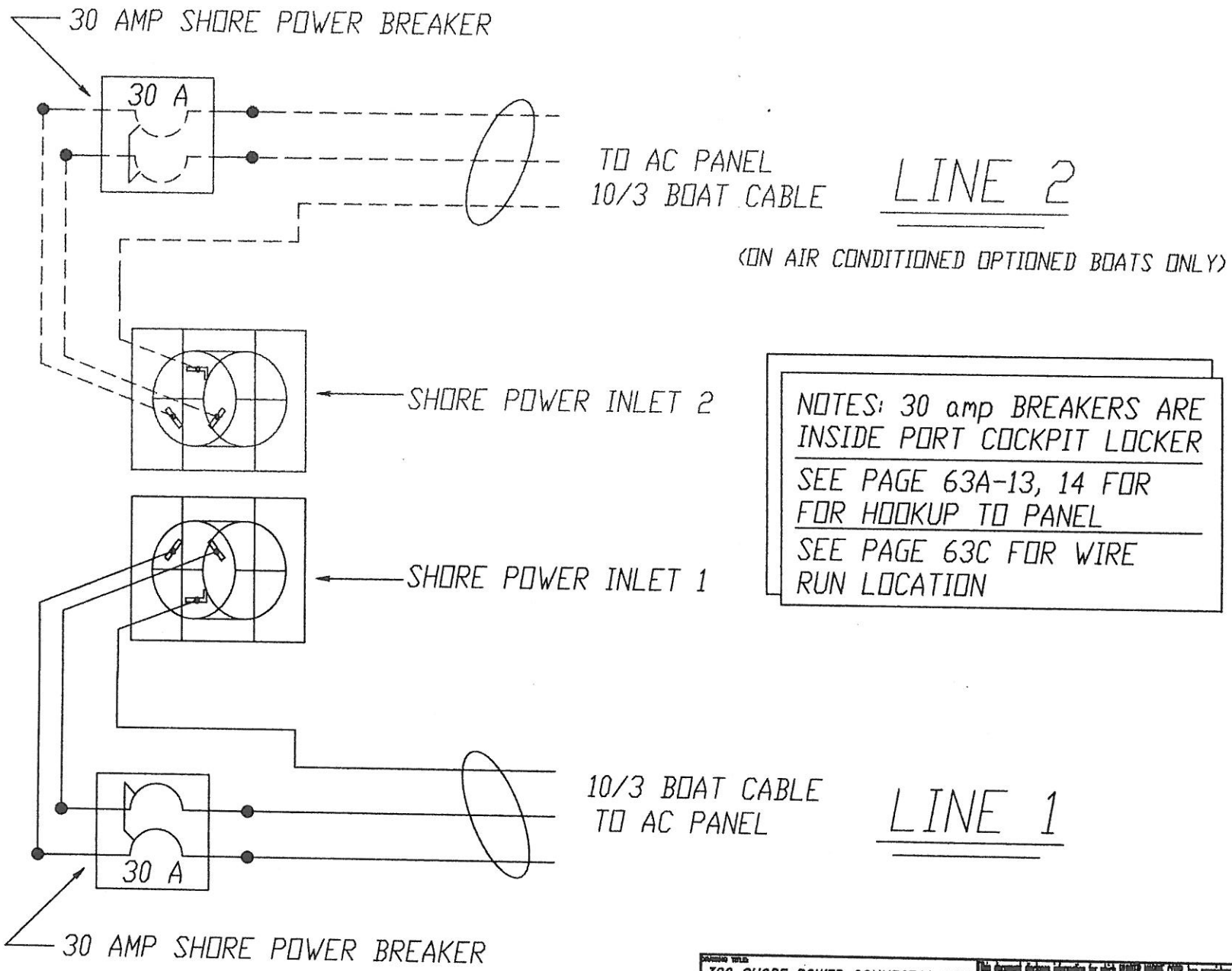


DRAWING TITLE: 380 SHORE POWER CONNECTOR SCH.

DRAWING NO. 3808065A | REVISION NO. NONE

DRAWN BY: ENGINEERING DEPT. | DATE:

This document discloses information for which HUNTER MARINE CORP. has proprietary rights.

HUNTER

# 380 ELECTRICAL WIRING/CABLE DATA

## 12V.D.C. SYSTEM

| CIRCUIT/BREAKER | AMPERAGE | WIRE SIZE | WIRE COLOR |
|---|---|---|---|
| D.C. MAIN | 50amp | 6gague | ORANGE/RED |
| PANEL LIGHTS | 5amp | INTERN. WIRED | RED |
| CABIN LIGHTS 1 | 20amp | 16gauge | BLUE |
| CABIN LIGHTS 2 | 20amp | 16gauge | BLUE |
| COURTESY 1 | 10amp | 16gauge | BLUE/WHITE |
| COURTESY 2 | 10amp | 16gauge | BLUE/WHITE |
| TANK INDICATOR | 5amp | 14/2 BOAT CABLE | BLACK (NEG.) & WHITE (POS.) |
| WATER PRESSURE | 10amp | 12gauge | BROWN |
| FWD.SHOWER SUMP | 10amp | 12gauge | BROWN/YELLOW |
| AFTSHOWER SUMP | 10amp | 12gauge | BROWN/BLACK |
| MACERATOR 1 | 20amp | 10gauge | BROWN/WHITE |
| MACERATOR 2 | 20amp | 10gauge | BROWN/WHITE |
| STEREO | 10amp | 16gauge | RED & YELLOW |
| STEREO **W/AMPLIFIER** | 20amp | 12gauge | RED |
| REFRIGERATION | 15amp | 8gauge | RED |
| L.P. GAS | 5amp | 14/2 BOAT CABLE | BLACK (NEG.) & WHITE (POS.) |
| WINDLASS (SWITCH) | 5amp | 16gauge | RED/WHITE & RED/BLACK |
| INSTRUMENTS | 5amp | VENDOR SUPPLIED | RED & YELLOW (SCREEN) |
| G.P.S. | 5amp | 16gauge | RED/BLACK |
| V.H.F. | 10amp | 16gauge | RED & WHITE |
| AUTO-PILOT | VARIES PER MODEL | 8gauge | RED |
| ANCHOR LIGHT | 5amp | 16gauge | GRAY/RED |
| STEAMING LIGHT | 5amp | 16gauge | GRAY/GREEN |
| DECK LIGHT | 15amp | 16gauge | GRAY |
| RUNNING LIGHTS | 10amp (LGR. MOD.) | 16gauge | GRAY/WHITE |
| RUNNING LIGHTS | 5amp (SM. MOD.) | 16gauge | GRAY/WHITE |
| COMPASS (TIES TO RUN. LIGHTS) | | 16gauge | GRAY/WHITE |
| BATTERY CABLES | | 2/O | RED |
| ENGINE STARTER CABLE | | 2/O | RED |
| HALYARD WINCH | | 2gauge | RED |
| WINDLASS (MOTOR) CABLE | | 2gauge | RED |

## 110V.A.C. SYSTEM

| | | | |
|---|---|---|---|
| SHORE POWER A.C. MAIN/S | 30 amp | 10/3 BOAT CABLE | BLACK (HOT) & WHITE (NEU.) |
| OUTLETS | 15amp | 14/3 B0AT CABLE | BLACK (HOT) & WHITE (NEU.) |
| MICROWAVE OVEN | 15amp | 14/3 B0AT CABLE | BLACK (HOT) & WHITE (NEU.) |
| WATER HEATER | 20amp | 14/3 BOAT CABLE | BLACK (HOT) & WHITE (NEU.) |
| BATTERY CHARGER | 15amp | 14/3 BOAT CABLE | BLACK (HOT) & WHITE (NEU.) |
| INVERTER | INTERNAL | 10/3 BOAT CABLE | BLACK (HOT) & WHITE (NEU.) |
| AIR CONDITIONING | 25amp | 10/3 BOAT CABLE | BLACK (HOT) & WHITE (NEU.) |

## 220V.A.C. SYSTEM (ON SELECT OVERSEAS MODELS ONLY)

| | | | |
|---|---|---|---|
| SHORE POWER A.C. MAIN/S | 15 amp | 10/3 BOAT CABLE | BLACK (HOT) & WHITE (NEU.) |
| OUTLETS | 10amp | 14/3 B0AT CABLE | BLACK (HOT) & WHITE (NEU.) |
| MICROWAVE OVEN | 10amp | 14/3 B0AT CABLE | BLACK (HOT) & WHITE (NEU.) |
| WATER HEATER | 10amp | 14/3 BOAT CABLE | BLACK (HOT) & WHITE (NEU.) |
| BATTERY CHARGER | 10amp | 14/3 BOAT CABLE | BLACK (HOT) & WHITE (NEU.) |
| INVERTER | N/A | 10/3 BOAT CABLE | BLACK (HOT) & WHITE (NEU.) |
| AIR CONDITIONING | 15amp | 10/3 BOAT CABLE | BLACK (HOT) & WHITE (NEU.) |

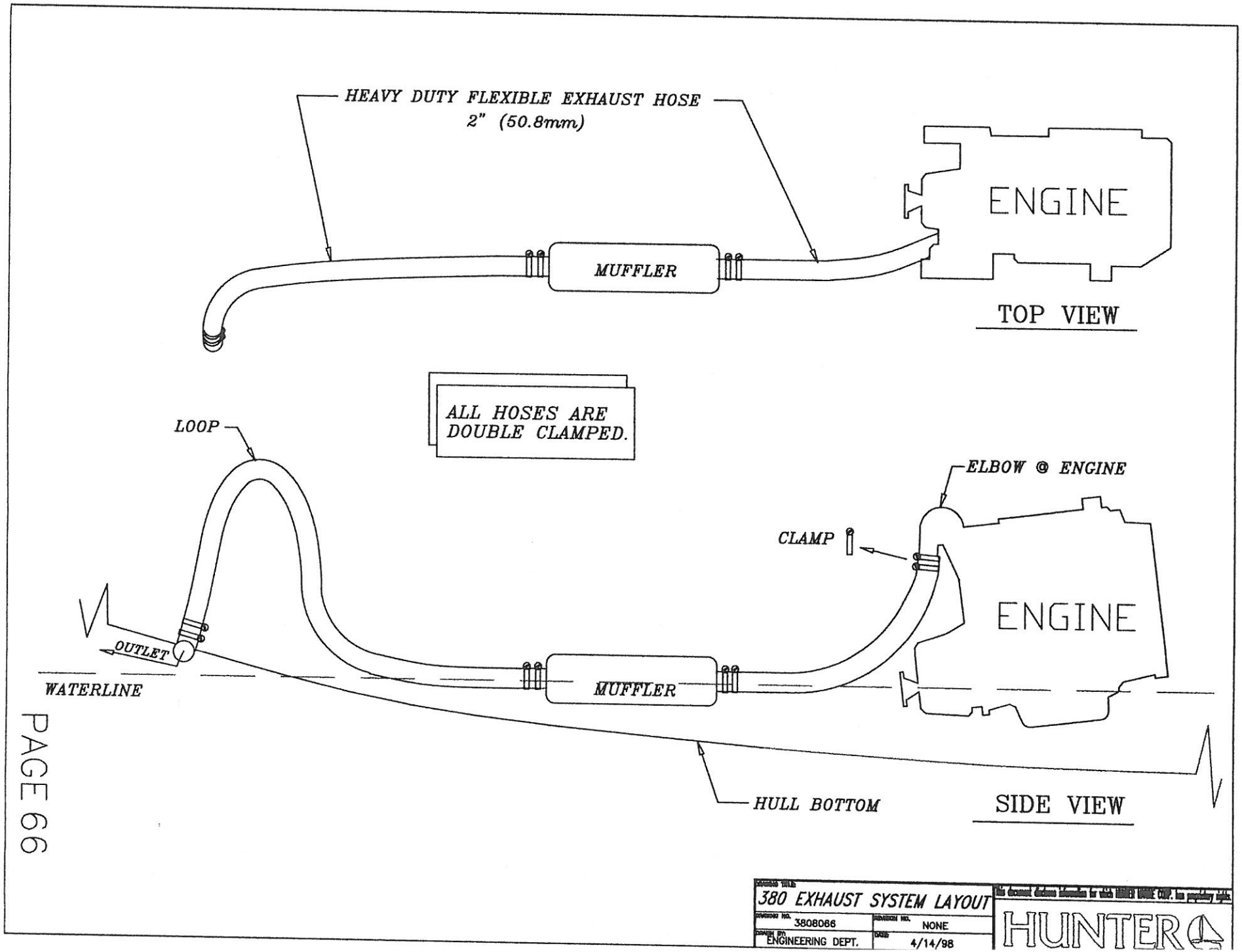
HEAVY DUTY FLEXIBLE EXHAUST HOSE
2" (50.8mm)
MUFFLER
ENGINE
TOP VIEW
ALL HOSES ARE
DOUBLE CLAMPED.
LOOP
ELBOW @ ENGINE
CLAMP
ENGINE
OUTLET
WATERLINE
MUFFLER
HULL BOTTOM
SIDE VIEW
380 EXHAUST SYSTEM LAYOUT
3808066
NONE
ENGINEERING DEPT.
4/14/98
HUNTER

IMPORTANT:

SEE EDSON STEERING MAINTENANCE UNDER 'MAINTENANCE' FOR A COMPLETE DESCRIPTION OF STEERING COMPONENTS AND VITAL ROUTINE MAINTENANCE PROCEDURES.

NOTE: THIS UNIT IS INSIDE COCKPIT CONSOLE, CONSOLE NOT SHOWN FOR CLARITY

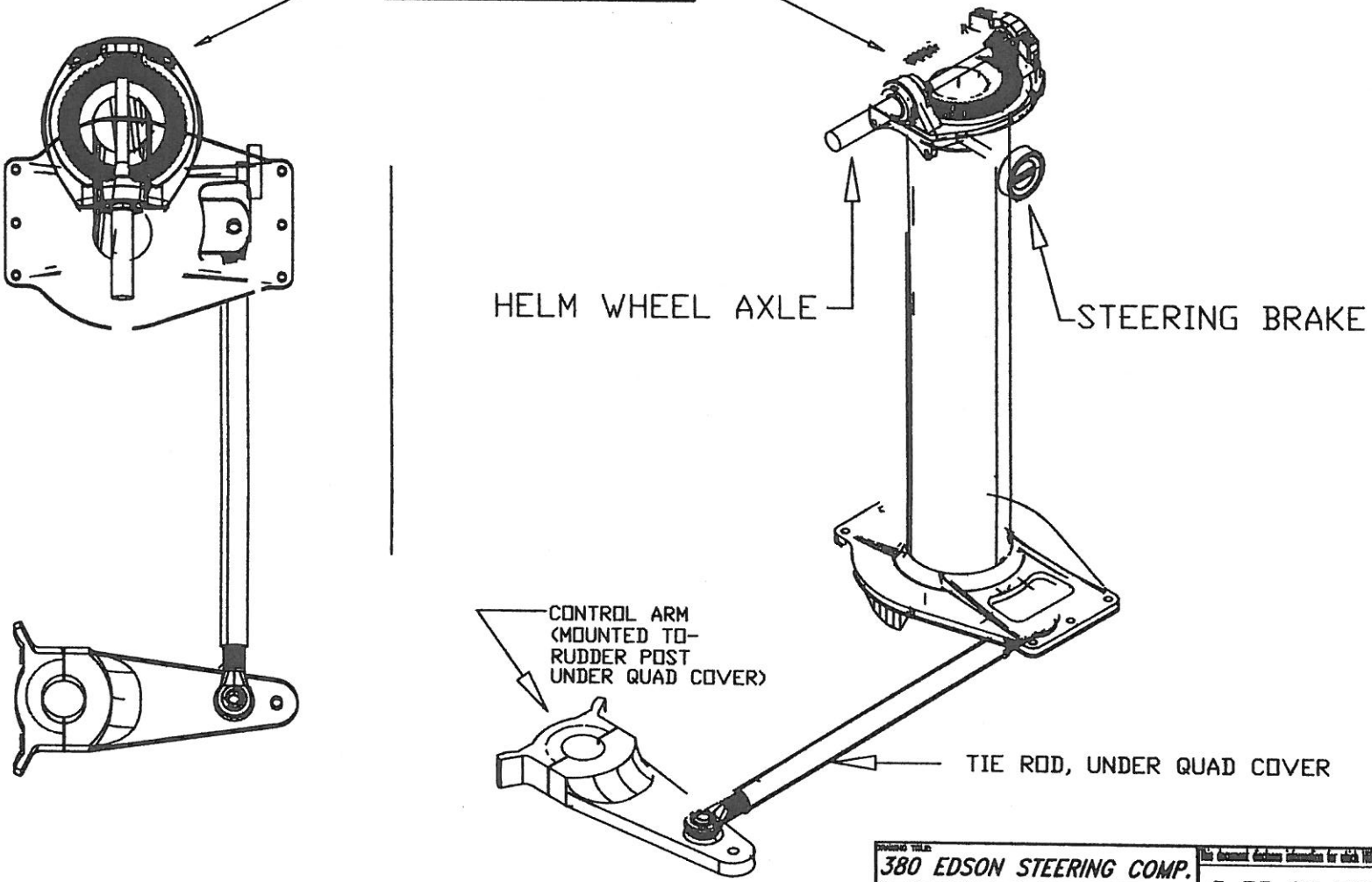


DRAWING TITLE: 380 EDSON STEERING COMP.

DRAWING NO. 3808067B REVISION NO. NONE

This document discloses information for which HUNTER MARINE CORP. has proprietary rights.

HUNTER

# EDSON ENGINEERING BULLETIN

## CD–i COMPACT RACK AND PINION PEDESTAL STEERING MAINTENANCE

THE EDSON CD–i GEARED STEERING SYSTEM HAS BEEN DESIGNED FOR YEARS OF TROUBLE–FREE SERVICE. BUT AS WITH ALL SYSTEMS USED IN THE HARSH MARINE ENVIORNMENT, PROPER MAINTENANCE AND CARE IS REQUIRED SO THAT THE SYSTEM REMAINS IN LIKE–NEW CONDITION.

THE EDSON CD–i SYSTEM SHOULD BE LUBRICATED WITH HEAVY–DUTY TEFLON GREASE, SUCH AS EDSON'S PART #827. THE TOP RACK AND PINION GEARS, UPPER AND LOWER GREASE FITTINGS FOR THE NEEDLE BEARINGS REQUIRE ANNUAL LUBRICATION.

RACK AND PINION TEETH: GRADUALLY TURN THE WHEEL FROM PORT TO STARBOARD WHILE APPLYING GREASE TO THE INDIVIDUAL TEETH TO INSURE THAT THE ENTIRE TOOTH SURF–ACES ARE BEING LUBRICATED.

DOWNTUBE NEEDLE BEATINGS: GREASE FITTINGS ARE LO–CATED ON THE INSIDE OF THE DOWNTUBE JUST BELOW THE WHEEL SHAFT AND JUST ABOVE THE LOWER END OF THE DOWNTUBE ON THE FORWARD SIDE. BOTH BEARINGS SHOULD BE LUBRICATED AT THESE LOCATIONS. BECAUSE OF THE VERY TIGHT TOLERENCES OF THE BEARINGS, A LITTLE GREASE GOES A LONG WAY– DO NOT OVER LUBRICATE THE SYSTEM. THE SYSTEM SHOULD BE LUBRICATED AT LEAST ONCE A YEAR.

IMPORTANT
TO PROPERLY MAINTAIN THE MOVING PARTS IN THE EDISON CD–i COMPACT RACK AND PINION STEERING SYSTEM, IT IS NECESSARY TO REMOVE THE COM–PASS AND ITS CYLINDER. FOR PROPER ALIGNMENT WHEN REINSTALLING THE COMPASS, WE RECOMMEND PLACING THREE OR FOUR PIECES OF TAPE ON THE PEDASTAL AND COMPASS. SLIT THE TAPE WHEN REMOVING THE COMPASS FOR VISUAL REALIGNMENT,
TOUR COMPASS MUST THEN BE CHECKED FOR ACCURACY BEFOR USING THE BOAT

DRAG LINK END FITTINGS: THE BALL JOINT AT BOTH ENDS OF THE DRAG LENGHTS SHOULD BE LUBRICATED ANNUALLY WITH TEFLON GREASE AS WELL. APPLY A SMALL AMOUNT OF GREASE TO THE BALL JOINT AND MOVE THE BALL SIDE–TO–SIDE TO LUBRICATE THE ENTIRE BEARING SURFACE. REMOVING THE DRAG LINK ENDS FROM THE TILLER ARMS MAY BE NECES–SSARY.

SPECIAL INFORMATION FOR EDSON INTERNAL CD–i STEERING SYSTEMS INSTALLED ON HUNTER YATCHS:

BOTH THE DOWNTUBE AND STEERING SHAFT BEARINGS REQUIRE LUBRICATION WITH TEFLON GREASE. THE UPPER BEARING GREASE FITTING IS LOCATED JUST UNDER THE TOP BOWL CASTING ON THE FORWARD SIDE OF THE OUTER TUBE. THE LOWER BEARING GREASE FITTING IS LOCATED JUST ABOVE DECK LEVEL ON THE FOWARD SIDE OF THE OUTER TUBE. THE STEERING WHEEL SHAFT NEEDLE BEARING GREASE FITTING IS LOCATED ON THE TOP OF THE AFT BEARING RACE. THE FORWARD BEARING IS SEALED AND REQUIRES NO LUBRICATION.

HUNTER
380 EDSON STEERING MAINTENANCE
380B067C
NONE

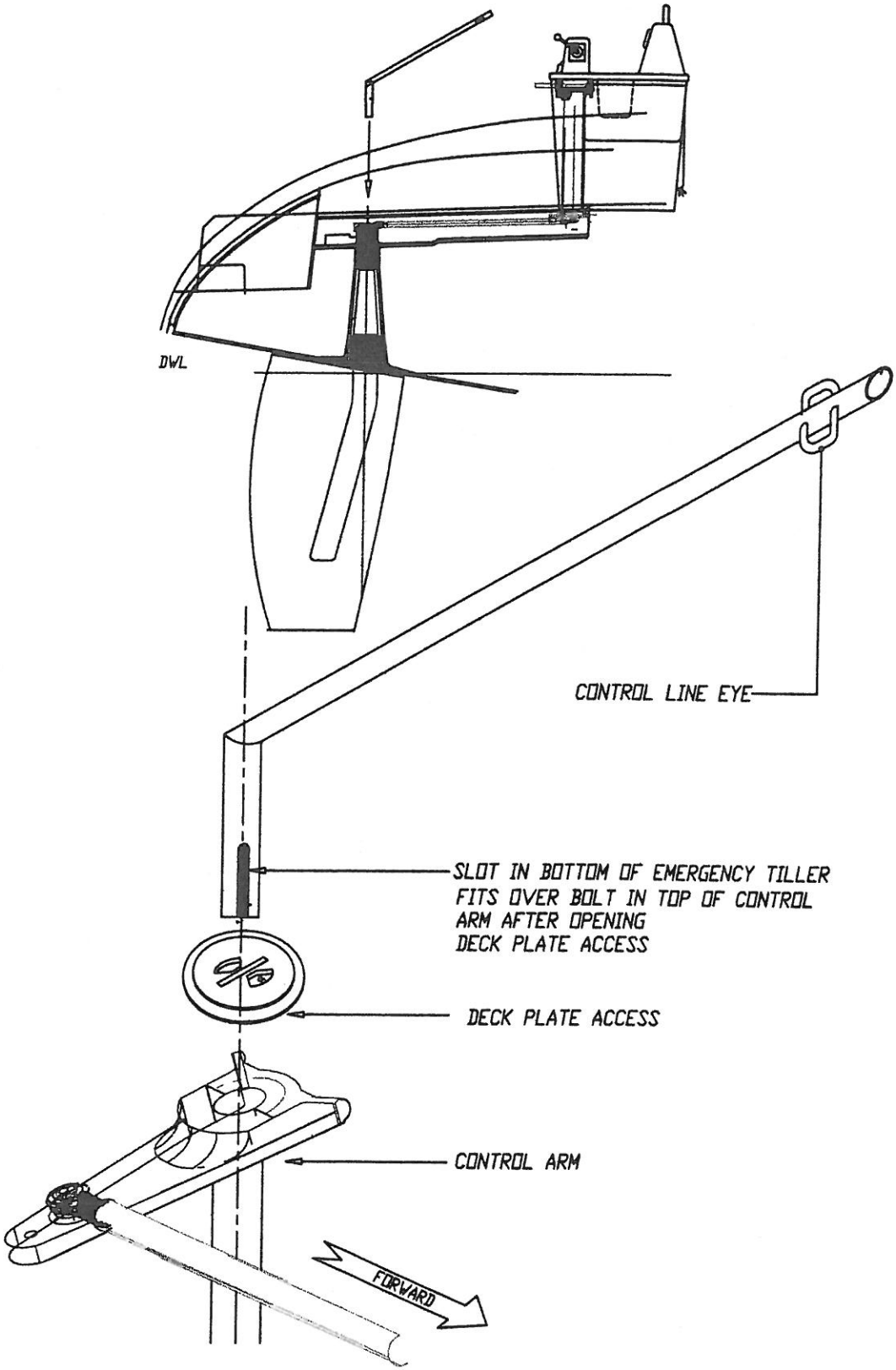


DRAWING TITLE: 380 EMERGENCY TILLER

DRAWING NO. 38080069

REVISION NO. NONE

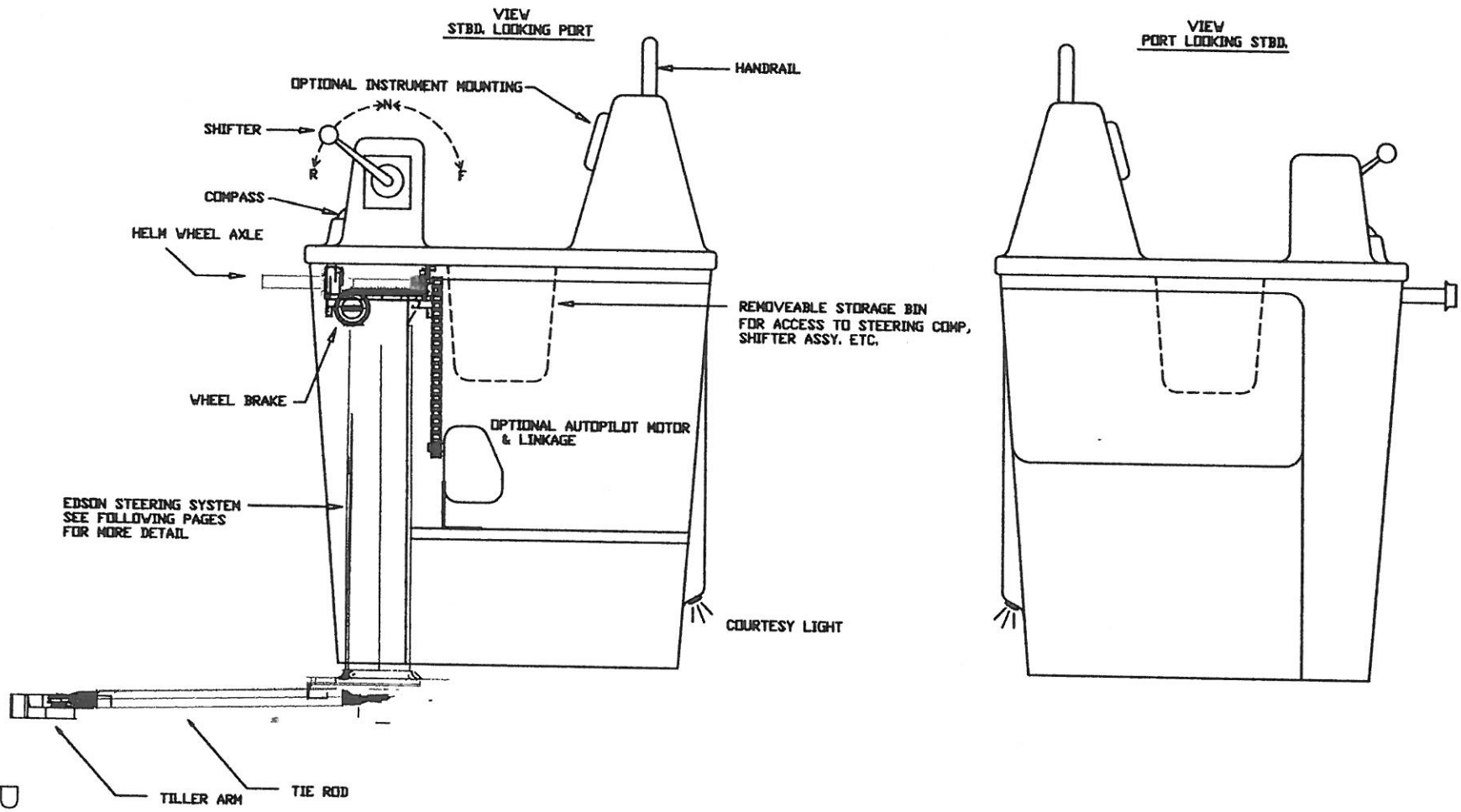


DRAWING TITLE: 380 STEERING/CONSOLE LAYOUT

DRAWING NO. 3808067A | REVISION NO. NONE

This document discloses information for which HUNTER MARINE CORP. has proprietary rights.

HUNTER

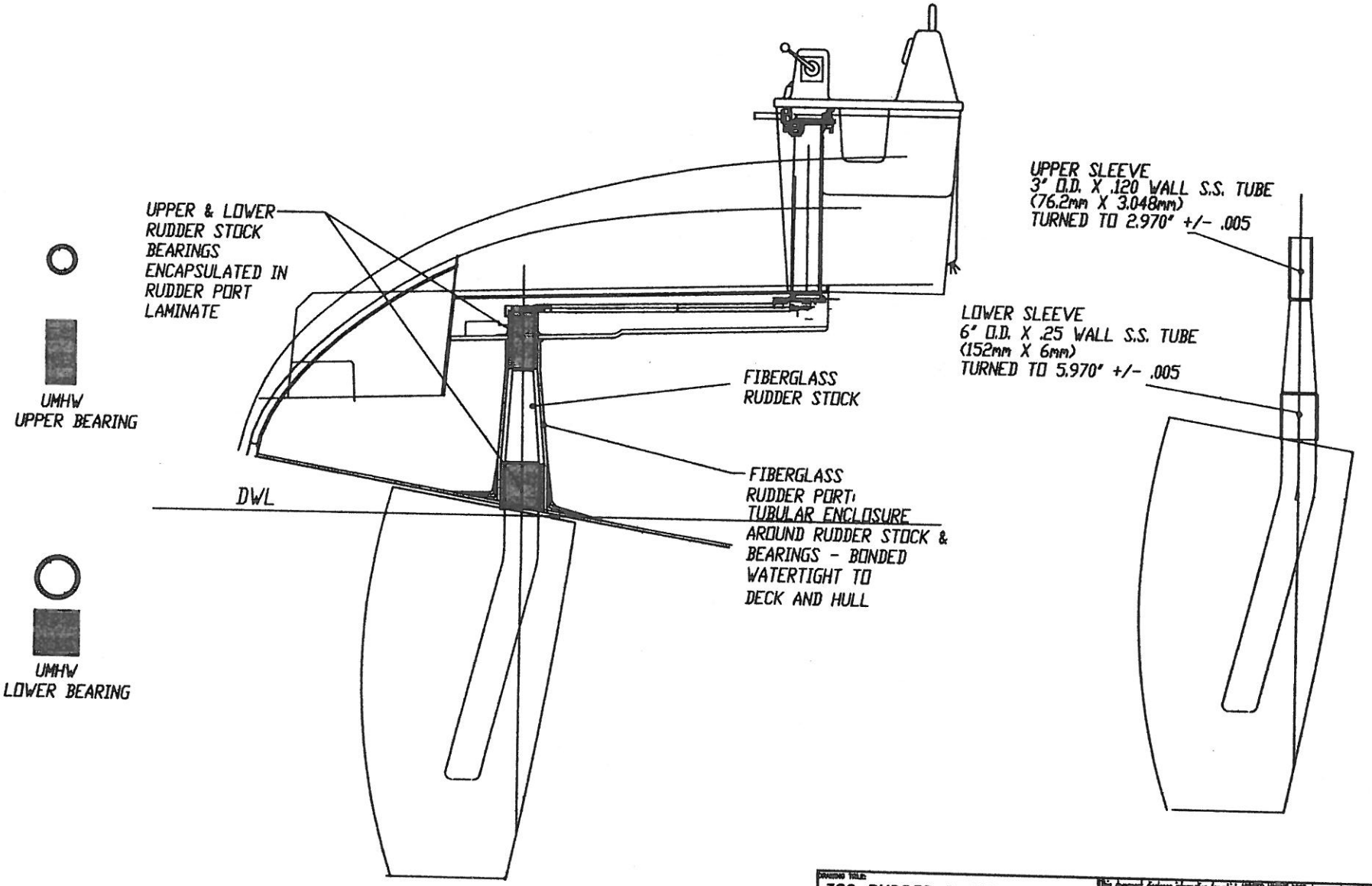


DRAWING TITLE: 380 RUDDER & SHAFT DETAILS

DRAWING NO. 3808068 REVISION NO. NONE

This document discloses information for which HUNTER MARINE CORP. has proprietary rights.

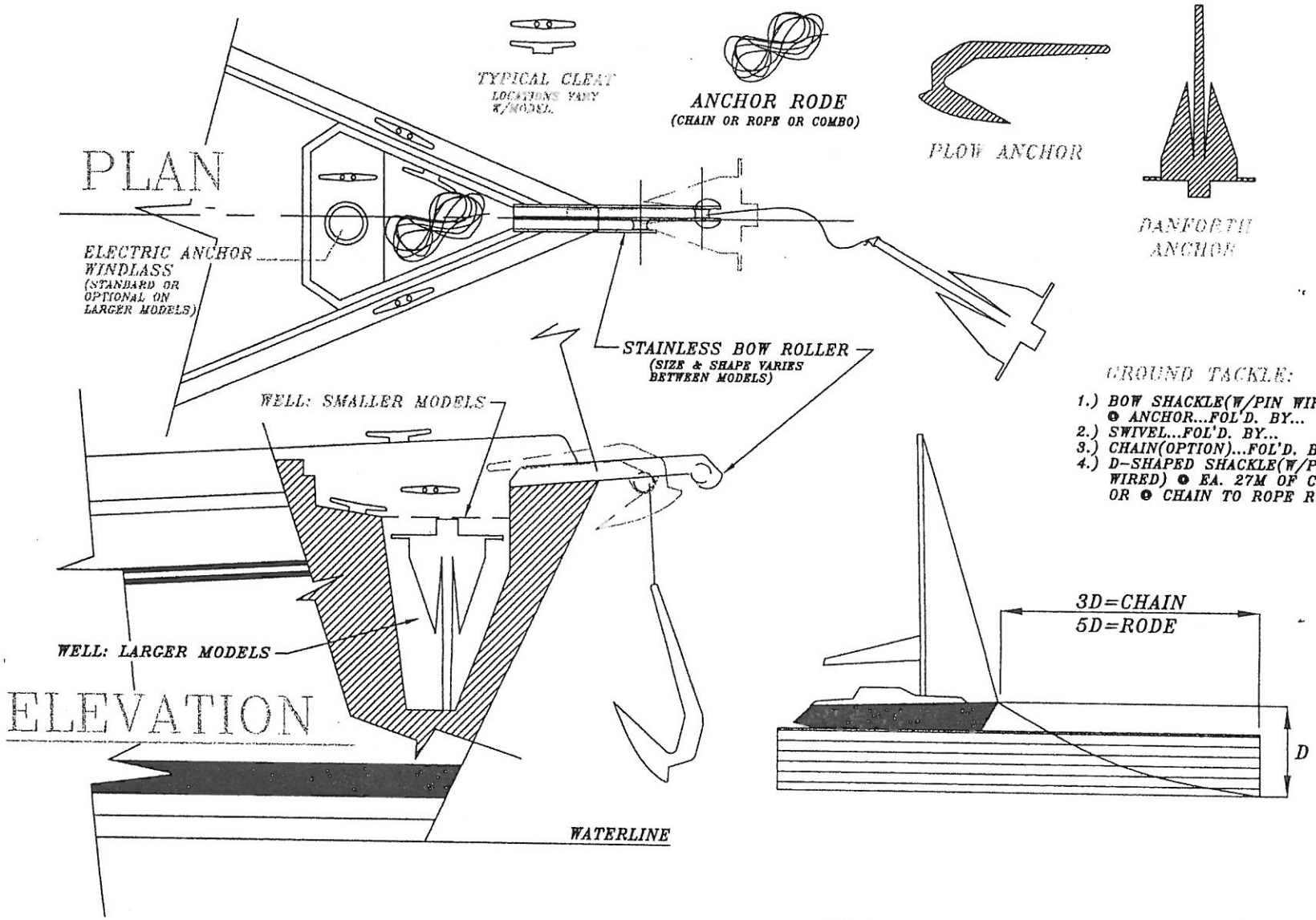


GROUND TACKLE:

1.) BOW SHACKLE(W/PIN WIRED) @ ANCHOR...FOL'D. BY...
2.) SWIVEL...FOL'D. BY...
3.) CHAIN(OPTION)...FOL'D. BY...
4.) D-SHAPED SHACKLE(W/PIN WIRED) @ EA. 27M OF CHAIN OR @ CHAIN TO ROPE RODE.

| | |
|---|---|
| ANCHORING | |
| 3808070 | NONE |
| ENGINEERING DEPT. | 1/7/99 |

HUNTER

THIS PAGE UPDATED AS OF HULL HS-44 1.18.99