MORSE MARINE PRODUCTS

OWNER'S MANUAL

INSTALLATION, OPERATION & MAINTENANCE INSTRUCTIONS

FOR THE

MV-2

CONTROL

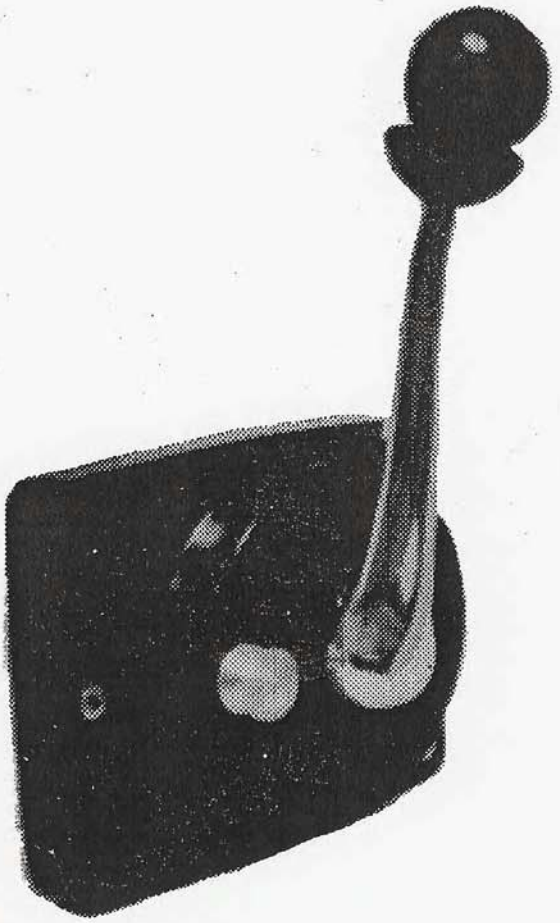

PLEASE READ THESE INSTRUCTIONS CAREFULLY AND THOROUGHLY BEFORE INSTALLING OR OPERATING THIS CONTROL.

55001-518 MARCH 1988

Imo Industries Inc.
Morse Controls Division
21 Clinton Street
Hudson, Ohio 44236-2899
FAX 216-653-7799
216-653-7701

INSTALLATION INSTRUCTIONS

MV-2 CONTROL

INTRODUCTION

The Morse MV-2 Remote Control is designed to provide convenient, one hand, single lever operation of shift and throttle for most popular outboards, inboard/outboard and inboards equipped with hydraulic reverse gears.

A safety feature of the MV-2 is a Neutral Locking Hand Lever. It can only be disengaged from Neutral by raising lifter under the ball knob.

The MV-2 accepts Morse 33C Red Jaket and 33C Supreme Red Jaket cables.

A neutral safety switch is standard, except on MV-2 controls assembled for inboard ski boats (if switch is required, Kit # 300928 is available).

IMPORTANT SAFETY NOTICES

MORSE CONTROLS HIGHLY RECOMMENDS THE INSTALLATION AND USAGE OF AN ENGINE EMERGENCY SHUT-OFF SWITCH (SOMETIMES CALLED A "KILL SWITCH") AS AN IMPORTANT SAFETY FEATURE FOR CLASS "A" AND CLASS "1" BOATS. THIS SWITCH SHOULD BE CONNECTED, BY A CORD, TO THE BOAT DRIVER. SHOULD THE DRIVER BE THROWN FROM THE HELM POSITION, THE ENGINE WILL AUTOMATICALLY SHUT OFF. THIS SHUT-OFF SWITCH IS NOT A STANDARD PART OF THE CONTROL YOU ARE USING. IT CAN BE OBTAINED FROM MOST MARINE DEALERS AND DISTRIBUTORS.

OBSERVE CAREFULLY THESE SYMBOLS BELOW FOR WARNINGS, CAUTIONS AND NOTES. THEY ARE TO ALERT INSTALLERS AND OPERATORS OF POSSIBLE DANGERS OR IMPORTANT INFORMATION CONTAINED IN THIS MANUAL. WARNINGS ALONE DO NOT ELIMINATE THE DANGERS NOR ARE THEY A SUBSTITUTE FOR SAFE BOAT HANDLING AND PROPER ACCIDENT PREVENTION MEASURES.

WARNING: FAILURE TO COMPLY WITH A WARNING MAY RESULT IN INJURY TO BOAT OCCUPANTS AND/OR OTHERS.

CAUTION: NON-COMPLIANCE WITH A CAUTION MAY RESULT IN FAILURE AND/OR DAMAGE TO THE CONTROL AND/OR EQUIPMENT.

NOTE: INDICATES INFORMATION OR INSTRUCTIONS THAT ARE NECESSARY FOR PROPER INSTALLATION, MAINTENANCE AND OPERATION.

GENERAL INFORMATION

The following information shows the procedures necessary to make a correct installation.

General operation and adjustment information is provided, along with periodic maintenance information.

A parts breakdown diagram of the control is provided, should the need for a replacement part become necessary.

SECTION 1

CONTROL CONFIGURATION

1.1 This section is provided to make sure that you have the correctly configured control for your application.

NOTE: TO DETERMINE THE CORRECT CONTROL ASSEMBLY FOR INBOARD ENGINES WITH HYDRAULIC CLUTCHES, IT IS FIRST NECESSARY TO DETERMINE WHETHER THE CONTROL CABLES MUST EXERT A "PUSH" OR "PULL" ACTION AT THE TRANSMISSION LEVER TO ENGAGE FORWARD GEAR, AND A "PUSH" OR "PULL" ACTION AT THE CARBURETOR LEVER TO OPEN THE THROTTLE.

Operate MV-2 control hand lever to learn which way shift and throttle arms function, for pull or push of control cables.

If control is not assembled for proper action of shift and throttle function required by engine, or left hand configuration is required, reassemble control as shown in following instructions of this section. (Figures 1 thru 5)

1.2 REPOSITIONING THE SHIFT ARM

If the transmission shift function is different from the action of control shift arm, reposition the arm by removing hex head screw, large flat washer and switch cam.

Pay attention to the 2-hole pattern on the arm for mounting pivot. Refer to Figure 1 and 6 for an understanding of these holes.

Should it be necessary to change shift direction from right hand to left hand or pull to push, the neutral safety switch must also be relocated in opposite position.

CAUTION: IF THE NEUTRAL SAFETY SWITCH IS NOT RELOCATED WHEN THE SHIFT ARM IS REPOSITIONED, DAMAGE TO THE SWITCH AND ELECTRICAL WIRING WILL OCCUR.

The following Figures 1, 2, 3, and 4 show all possible shift configurations in which control may be assembled for horizontal side mounting.

Hand lever may be relocated at any 30 Degree increment from right hand to left hand. To do this, the insert behind hand lever hub must be repositioned so that notch is aligned with hand lever interlock pawl.

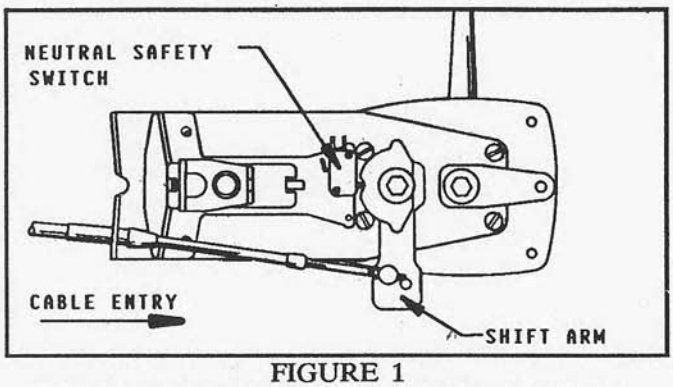

FIGURE 1
R.H.:CABLE FROM REAR-PULL TO GO FORWARD
L.H.:CABLE FROM FRONT-PUSH TO GO FORWARD

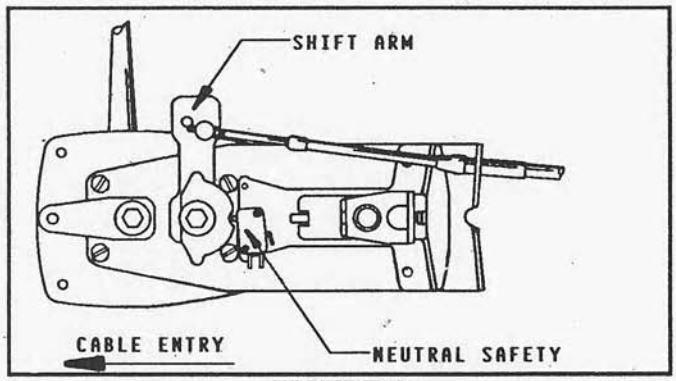

FIGURE 2
R.H.:CABLE FROM FRONT-PULL TO GO FORWARD
L.H.:CABLE FROM REAR-PUSH TO GO FORWARD

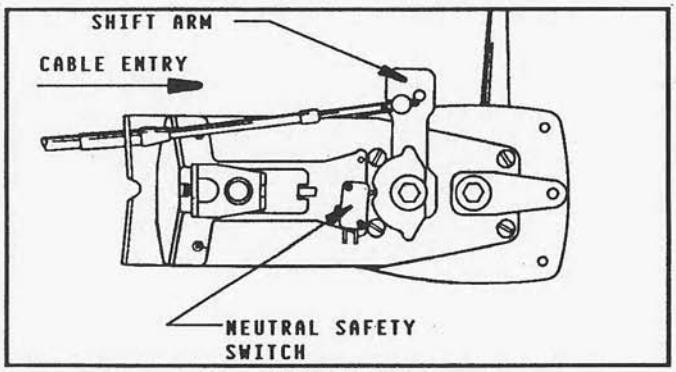

FIGURE 3
R.H.:CABLE FROM REAR-PUSH TO GO FORWARD
L.H.:CABLE FROM FRONT-PULL TO GO FORWARD

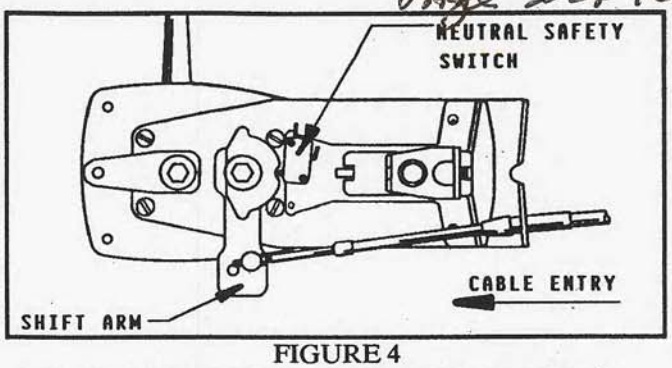

FIGURE 4
R.H.:CABLE FROM FRONT-PUSH TO GO FORWARD
L.H.:CABLE FROM REAR-PULL TO GO FORWARD

1.3 REVERSING THE THROTTLE ACTION

Check carburetor throttle arm to determine whether **push** or **pull** is required to **open** throttle.

NOTE: THROTTLE ARM AND DWELL BLOCK MUST BOTH POINT WITH CABLE ENTRY FOR "PUSH TO OPEN" OR BOTH MUST POINT AGAINST CABLE ENTRY FOR "PULL TO OPEN", AS SHOWN IN FIGURE 5.

If action is incorrect, reverse throttle arm by removing Hex Head Screw and large flat washer. Remove arm and reassemble in opposite position as shown in Figure 5.

Also, reverse position of dwell block and spring by removing screw flat washer, and nut. Reassemble in opposite position.

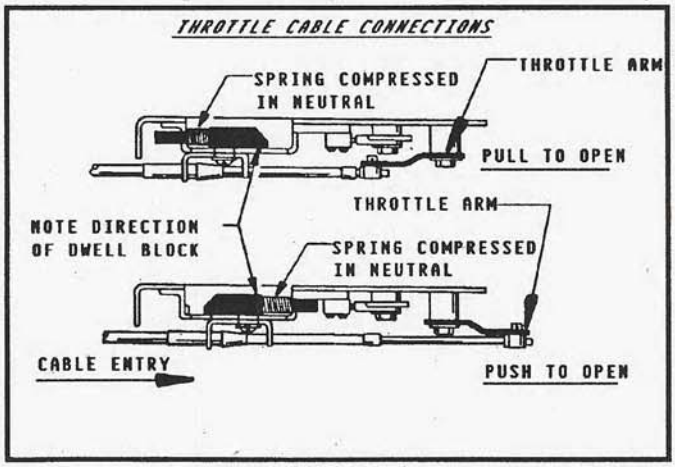

FIGURE 5

CAUTION: SHOULD IT BE NECESSARY TO REMOVE THE HANGER PLATE FROM THE BACK OF THE CONTROL, DO NOT REMOVE THE TWO (2) RECESSED SCREWS WHICH RETAIN THE BACK OF THE GEAR UNIT ASSEMBLY. DISASSEMBLY OF THE GEAR UNIT COULD RESULT IN THE LOSS OF THE DETENT SPRINGS AND BALLS.

SECTION 2

CHOOSE CONTROL LOCATION AND MEASURE CABLE LENGTH

2.1 LOCATION

Choose a mounting location for the control head which will provide comfortable operation of the hand lever, unobstructed movement of mechanism arms, and a clear path for cables to engine.

Figure 6 shows the control dimensions and the recommended clearance behind the mounting surface.

The recommended position for control head is shown in Figure 7. The vertical centerline of the hand lever should be in line with the front edge of seat and the hand lever hub should be about 2-1/2 inches (63mm) above seat.

Using the template provided, cut the appropriate mounting hole in panel as shown in Figure 8.

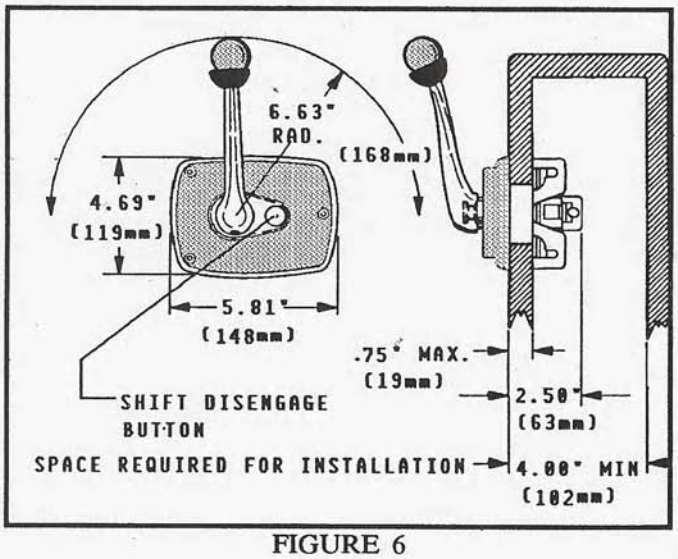

FIGURE 6

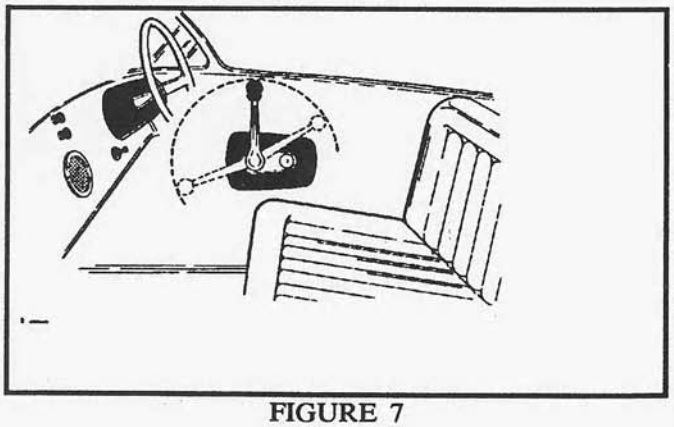

FIGURE 7

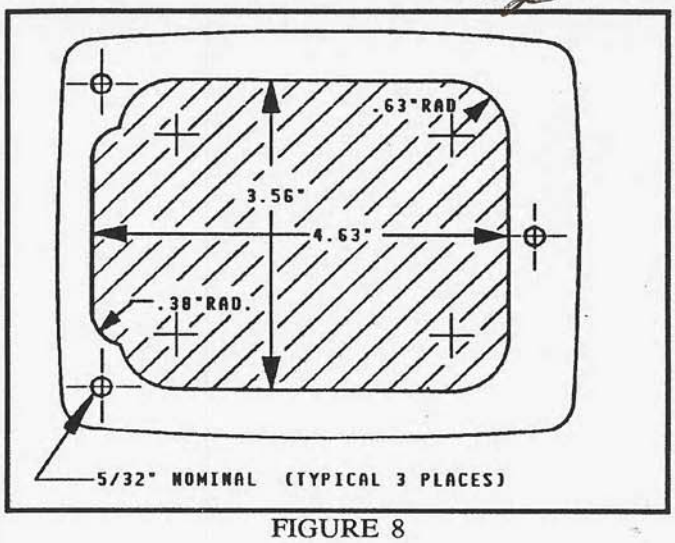

FIGURE 8

NOTE: MAXIMUM THICKNESS PANEL IS 3/4 INCH, AS SHOWN IN FIGURE 6. CONTROL WILL INSTALL MORE EASILY IN A 1/2 INCH THICK PANEL.

2.2 CABLE LENGTH

Measure from the control head position along an unobstructed path to the shift and throttle connections. Cable lengths are overall length. When a measurement is in feet and inches, specify the next whole foot. For outboard applications, add 4 feet for a loop.

SECTION 3

CONNECT CONTROL CABLES

3.1 CONNECT SHIFT CABLE TO CONTROL

Insert shift cable through opening at rear of hanger assembly in line with shift arm pivot attachment hole and lock cable hub in hanger slot.

Screw pivot onto cable rod, allowing threads to protrude through pivot 1/8 inch for standard travel, or 1/4 inch for long travel.

Lubricate pivot with grease, then insert into required hole in shift arm.(See Figure 6). Fasten with cotter pin. Tighten cable nut against pivot.

space to feed hanger bracket through panel cutout. (See Figure 8.)

Fastening recommendations as follows:

For normal mounting,

3 each Oval Head #10 x 1-1/4 long self tapping screws (item 31) are furnished.

Optional mounting method:

Use 3 each Flat or Oval Head #10 x 1-1/2" (max.) long bolts with anchor nuts (or tapped holes in metal panel.)

CAUTION: DO NOT USE CABLE HANGERS OR CLAMPS WHICH MAY CRUSH OR STRESS THE CABLES IN ANY WAY. DOING SO MAY IMPAIR THE FUNCTION OF THE CABLES.

CAUTION: DO NOT RESTRICT MOVEMENT OF THE THROTTLE CABLE WITHIN 2 FEET OF THE CONTROL. (SEE FIGURE 11.) TO DO SO MAY DAMAGE OR IMPAIR PROPER OPERATION OF THE THROTTLE CABLES.

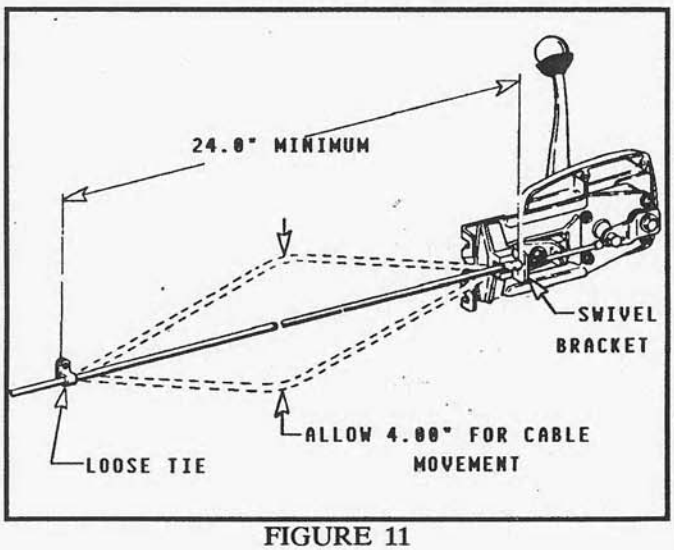

FIGURE 11

SECTION 6

CONNECT ENGINE

6.1 PROCEDURE

Connect the shift and throttle cables to the throttle and shift levers at the engine, following the instructions provided with the appropriate connection kit or with the engine.

6.2 SHIFT CABLE CONNECTION AND ADJUSTMENT

The shift cable must be connected so that the "FORWARD", "NEUTRAL" and "REVERSE" positions of the control shift lever will coincide with the forward, neutral and reverse positions of the transmission lever.

Re-adjust the cable terminals until the correct function of the shift lever is achieved.

Proper adjustment of the shift cable will result in a much better operating control.

CAUTION: OVER JAMMING THE TRANSMISSION STOP ON EITHER END OF THE SHIFT TRAVEL MAY: 1) CAUSE EXCESSIVE WEAR OF THE DRIVE AND SHIFT GEAR, 2) RESULT IN A "HEAVY" FEEL OF THE HAND LEVER AND/OR 3) OVER STRESS AND DAMAGE THE CABLE.

6.3 THROTTLE CABLE CONNECTION & ADJUSTMENT

CAUTION: THE THROTTLE CABLE MUST BE DISCONNECTED FROM THE MOTOR BEFORE MAKING MOTOR IDLE ADJUSTMENTS. ADJUSTMENT OF THE MOTOR IDLE WHILE THE THROTTLE CABLE IS STILL CONNECTED TO THE MOTOR MAY CAUSE A JAMMING ACTION AGAINST THE IDLE STOP. AS A RESULT, THE CONTROL MAY NOT FUNCTION PROPERLY AND DAMAGE TO THE CONTROL, THE CABLE AND/OR THE MOTOR COULD

PROCEED AS FOLLOWS:

a. Adjust the motor to a smooth idle as recommended by the motor manufacturer. This must be done BEFORE con-

necting the control throttle cable to the carburetor or governor arm.

b. Place the hand lever of the control into the forward detent position.

c. Place the carburetor arm lightly against the idle stop.

d. Adjust the throttle cable terminal (at the motor end) to line up with the hole (or pin) on the carburetor arm, then connect the terminal to the arm.

Proper adjustment of the throttle cables will assure having long life from this control. When the throttle cable is correctly adjusted, the motor speed will remain at idle while the control is shifted, and will increase only when the hand lever is moved beyond the shift detent.

CAUTION: UNLESS ABOVE PROCEDURE "a" THRU "d" IS FOLLOWED, ENGINE R.P.M. WILL RAISE EXCESSIVELY DURING THE SHIFT CYCLE.

FOR THIS REASON, THERE IS A COMPRESSION SPRING-TYPE THROTTLE DWELL BUILT INTO THE CABLE ANCHOR ASSEMBLY, WHICH ALLOWS THROTTLE CABLE ACTION TO REMAIN STATIONARY DURING THE SHIFT CYCLE. (SEE FIGURE 5)

AS A RESULT, THE HAND LEVER MUST BE IN THE FORWARD DETENT POSITION AND THE CARBURETOR THROTTLE ARM MUST BE AT IDLE POSITION WHILE CONNECTING THE THROTTLE CABLE TO THE ENGINE.

CAUTION: THE FULL OPEN THROTTLE POSITION USUALLY VARIES WITH THE MAKE OF THE MOTOR. IF THE THROTTLE TRAVEL IS LESS THAN THE FULL STOP POSITION OF THE CONTROL, AN EFFORT SHOULD BE MADE TO LIMIT THE HAND LEVER TRAVEL BY MEANS OF A SHELF, OR A STOP OF SOME SORT, UNDER THE HAND LEVER. EXCESS PRESSURE ON THE HAND LEVER AT FULL OPEN THROTTLE POSITION MAY CAUSE DAMAGE TO THE CABLE, THE CONTROL AND/OR THE MOTOR.

SECTION 7

OPERATION AND ADJUSTMENT

7.1 PRELIMINARY CHECK

Check to make sure that there is no interference with either the hand lever or the control mechanism movement.

Place the control hand lever in Neutral position, then grasp button next to the hand lever hub. Pull out button (approx. .20") to disengage the shift (see Figure 6).

NOTE: TO OPERATE THE HAND LEVER, IT IS NECESSARY TO LIFT THE COLLAR (UNDER THE BALL KNOB) UPWARD, TO DISENGAGE THE NEUTRAL INTERLOCK.

Move the hand lever through the forward range to operate the carburetor throttle lever to full open-position. When the hand lever is returned to neutral position, the button must be pushed back in, so that the control may be operated in both shift and throttle range.

CAUTION: DO NOT FORCE SHIFT WHEN THE MOTOR IS NOT RUNNING. TO DO SO MAY DAMAGE THE CONTROL, THE CABLES AND/OR THE MOTOR, ESPECIALLY OUTBOARDS AND I/O's.

7.2 OPERATION: SHIFT AND THROTTLE

For starting or warm-up, place the control in Neutral Detent position, then grasp button beside the hand lever hub and pull out (approx. .20") to disengage shift. Lift collar under hand lever knob and move hand lever beyond shift detent to advance throttle for neutral warm-up.

When warm-up is completed, return hand lever to neutral detent, then push button back in, to re-engage the shift. The control is ready for shift and throttle operation.

When operating control, lift the collar under control knob to release hand lever from neutral.

Move hand lever "crisply" out of neutral into forward or reverse. When the throttle cable is correctly adjusted, the engine speed will remain at idle while the control is shifted, and will increase only when the hand lever is moved beyond the shift detent.

WARNING: DO NOT SHIFT TOO QUICKLY FROM FORWARD TO REVERSE. STAY IN THE NEUTRAL, OR IDLE, POSITION UNTIL THE BOAT HAS LOST MOST OF ITS HEADWAY BEFORE COMPLETING THE SHIFT TO REVERSE.

SECTION 8

MAINTENANCE

8.1 CORROSION PROTECTION

For maximum protection, especially in salt water areas, wipe all metallic parts, such as screw heads, cable sleeves, etc. with oil or light marine grease.

Chrome plated hand lever should be washed with fresh water and waxed regularly.

8.2 MECHANICAL PERFORMANCE

a.) Periodically check the control mechanism for loose fastenings and signs of wear on moving parts, particularly the cable terminals. Lubricate all moving parts with a good quality marine grease.

b.) Periodically examine the cables and engine connections for signs of physical damage, wear and/or corrosion. Replace all faulty or damaged parts as required.

8.3 ELECTRICAL PERFORMANCE

a.) Periodically chec k the switch for proper electrical function.

b.) Periodically check the wiring for abrasion which may cause a short circuit.

NOTE: "PERIODICALLY" IS A TIME FRAME WHICH DEPENDS ON THE ACTUAL USAGE OF THE BOAT. FOR A BOAT USED ONLY A FEW WEEK-ENDS IN THE SUMMER, PERIODICALLY COULD MEAN "ANNUALLY". FOR A BOAT USED CONTINUALLY DAY AFTER DAY ALL YEAR, PERIODICALLY COULD MEAN "MONTHLY", OR EVEN "WEEKLY".

To obtain standard (2-3/4 inch) cable shift travel at engine use shift arm on control at short pivot hole location as shown in Figure 9.

For Mercury, long (3 inch) cable shift travel at engine is necessary. Assemble shift arm to control using longest pivot hole location.

3.2 CONNECT THROTTLE CABLE TO CONTROL

With opening in swivel bracket nearest to the cable entry end of the control, insert throttle cable through opening in swivel bracket and secure cable hub in bracket slot.

Screw pivot onto cable rod and allow cable rod threads to protrude through pivot 3/16" minimum.

Lubricate pivot with grease, then insert into hole in throttle arm. Fasten with cotter pin. Tighten cable nut against pivot.

CUTION: THE PIVOT MUST BE IN HOLE NEAREST TO CABLE ENTRY END OF CONTROL. USING THE HOLE IN THE SHIFT ARM FURTHEST AWAY FROM THE CABLE MOUNTING SUPPORT WILL PRODUCE UNEQUAL SHIFT TRAVEL BETWEEN "NEUTRAL TO FORWARD" AND "NEUTRAL TO TO REVERSE", RESULTING IN IMPROPER SHIFT ACTION.

NOTE: THE CONTROL SHIFT LEVER AND THE TRANSMISSION SHIFT LEVER MUST COINCIDE AT THE FORWARD, NEUTRAL AND REVERSE POSITIONS. DIFFERENT MAKES OF TRANSMISSIONS MAY REQUIRE DIFFERENT AMOUNTS OF SHIFT TRAVEL. FOR THIS REASON, THE CONTROL SHIFT LEVER IS PROVIDED WITH TWO (2) POSITIONS FOR ATTACHING THE SHIFT CABLE; ONE FOR STANDARD TRAVEL AND ONE FOR THE LONGEST TRAVEL. SEE FIGURE 9.

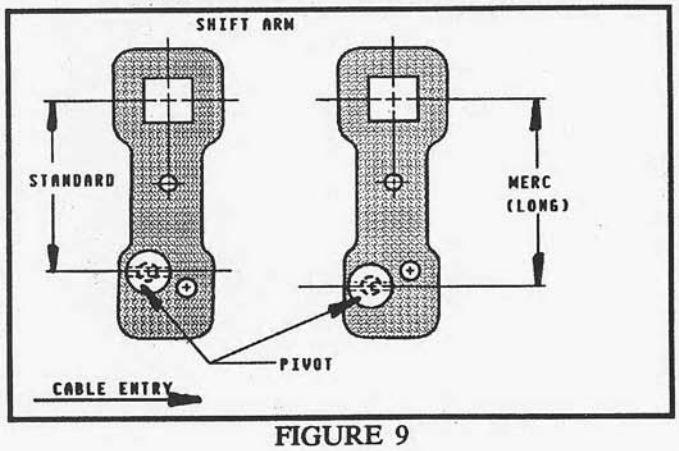

FIGURE 9

SECTION 4

ELECTRICAL

4.1 NEUTRAL SAFETY

Connect the neutral start switch between the ignition switch and the starter solenoid, as shown in Figure 10.

Use the terminals and insulators provided with the control to insure against an electrical short circuit.

CAUTION: CHECK TO MAKE SURE THAT THERE IS ELECTRICAL CONTINUITY ONLY WHEN THE CONTROL IS IN NEUTRAL. WHEN THE CONTROL IS IN GEAR, THERE MUST NOT BE ANY ELECTRICAL CONTINUITY.

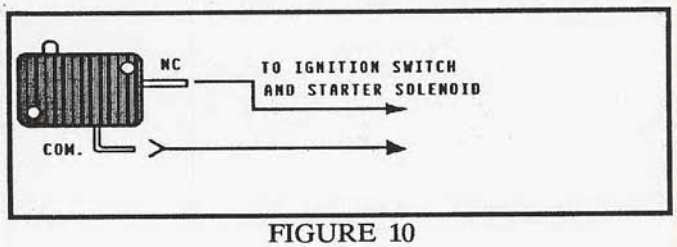

FIGURE 10

SECTION 5

MOUNT CONTROL

5.1 CABLE PATH

Run the cables, which are connected to the control, back to the throttle and shift location of the engine and drive.

The cables should run as straight as possible, avoiding any sharp bends. Make no bends in the cable of less than 8" radius.

The cables shoul d be supported by using cable hangers or by running them through straight sections of conduit for extremely long runs.

5.2 INSTALLATION

Place hand lever in forward position, so that as a result shift arm and throttle arm will take the least amount of

EXPLODED VIEW

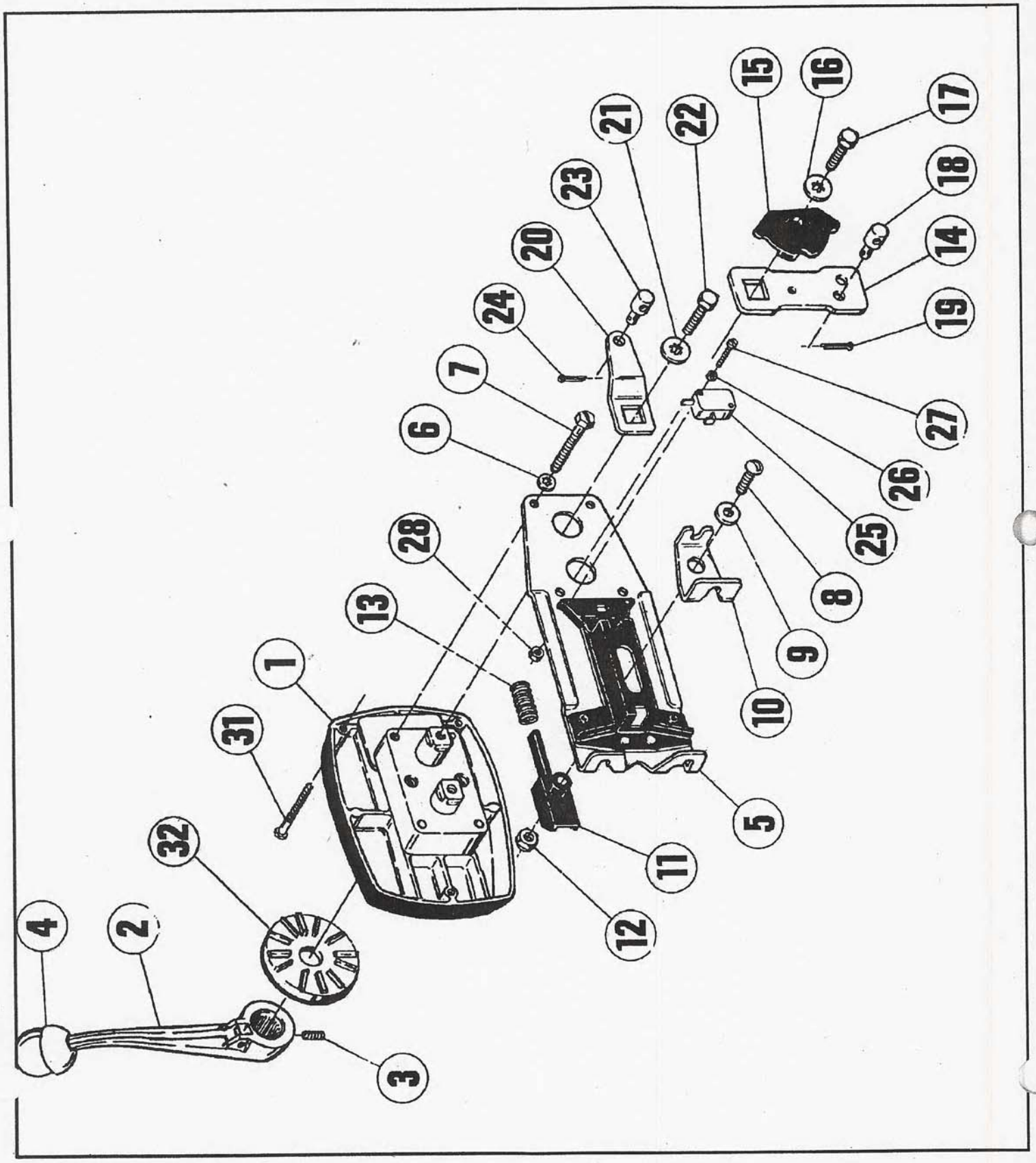

BILL OF MATERIALS

ITEM	DESCRIPTION	NO. REQ'D.	PART NUMBER
1	GEAR UNIT	1	306501
2	HAND LEVER ASSEMBLY	1	306494
	ALTERNATE: HAND LEVER WITHOUT INTERLOCK	1	31046-002
3	SETSCREW, HEX SOCKET, CUP POINT 5/16-18 x 5/16" LONG	1	COMMERCIAL
4	KNOB	1	35232-004
5	HANGER ASSEMBLY	1	306514
6	LOCKWASHER, #10 INTERNAL TOOTH	4	COMMERCIAL
7	HEX HEAD MACH.SCREW #10-32 x 1-3/8 LONG	4	COMMERCIAL
8	ROUND HD. MACH. SCREW 1/4-28 x 7/8 LONG	1	COMMERCIAL
9	FLATWASHER, 1/4"	1	COMMERCIAL
10	SWIVEL BRACKET	1	68394
11	DWELL BLOCK	1	62748
12	HEX ELASTIC STOP NUT 1/4-28	1	COMMERCIAL
13	SPRING	1	42206
14	SHIFT ARM	1	68269
15	SWITCH ACTUATION CAM	1	61697
16	FLATWASHER, 1/4"	2	302068
17	LOCKING HEX HEAD SCREW, 1/4-28 x 1/2" LG	2	301489
18	PIVOT	2	31029
19	COTTER PIN	2	COMMERCIAL
20	THROTTLE ARM	1	43033
21	FLATWASHER, 1/4" (SEE ITEM 16)	-	------
22	SCREW (SEE ITEM 17)	-	------
23	PIVOT (SEE ITEM 18)	-	------
24	COTTER PIN (SEE ITEM 19)	-	------
25	MICROSWITCH S.P.N.C.	1	51801-022
26	LOCKWASHER, #4 INTERNAL TOOTH	2	COMMERCIAL
27	ROUND HD. MACH. SCREW #4-40 x 5/8" LG.	2	COMMERCIAL
28	HEX NUT, #4-40	2	COMMERCIAL
29	SLIP-ON TERMINAL (NOT SHOWN)	2	51802-050
30	INSULATOR (NOT SHOWN)	2	62684
31	OVAL HD. SELF-TAPPING SCREW #10 x 1-1/4"	3	COMMERCIAL
32	INTERLOCK INSERT	1	306497