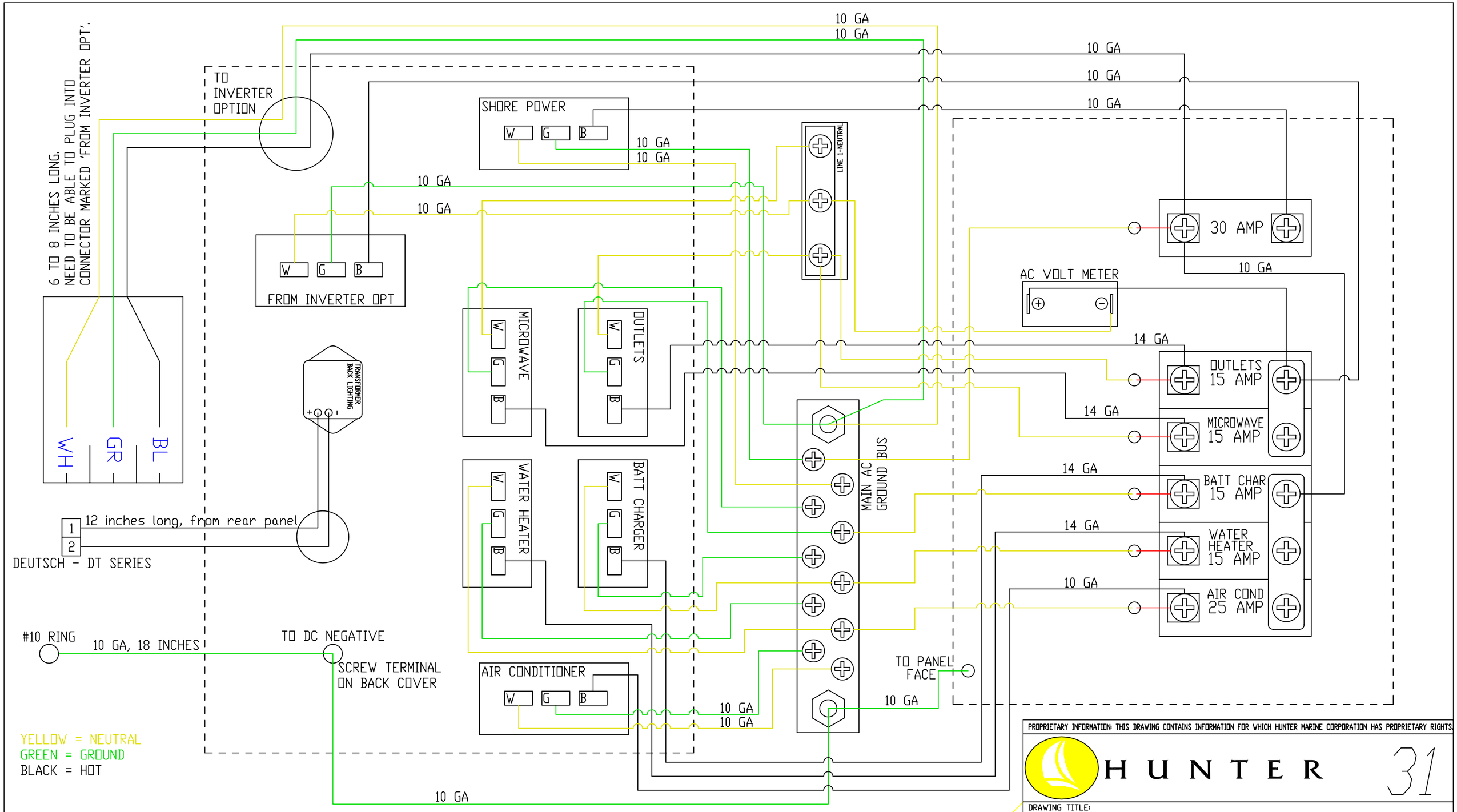

NOTE: BREAKER VALUES SHOWN ARE FOR 120V PANEL VERSION.
NEED PROTECTIVE CAPS FOR BATTERY CHARGER AND AIR CONDITIONER.

BREAKER LIST (230V):
BATTERY CHARGER - 10 AMPS
WATER HEATER - 10 AMPS
OUTLETS - 10 AMPS
MICROWAVE - 10 AMPS
AIR CONDITIONER - 15 AMPS

PROPRIETARY INFORMATION: THIS DRAWING CONTAINS INFORMATION FOR WHICH HUNTER MARINE CORPORATION HAS PROPRIETARY RIGHTS.

HUNTER 31

DRAWING TITLE: AC PANEL SCHEMATIC

DRAWN BY:	DATE:	SHEET	OF
JLK	18-Nov-05	1	1

SCALE:	HUNTER PART NO.	REVISION	DRAW #
1.000	TBD	B	PANEL_AC_H27_BACKSIDE

CHECKED: